DRY WIPE™

Secondary Belt Cleaner

Dry Wipe™ is designed to be the final cleaner on the conveyor belt. When there is still water remaining on the belt after the primary and secondary cleaners have done their job, this can cause a mess along the belt line. The squeegee effect of the Dry Wipe™ Cleaning system can wipe the belt dry.

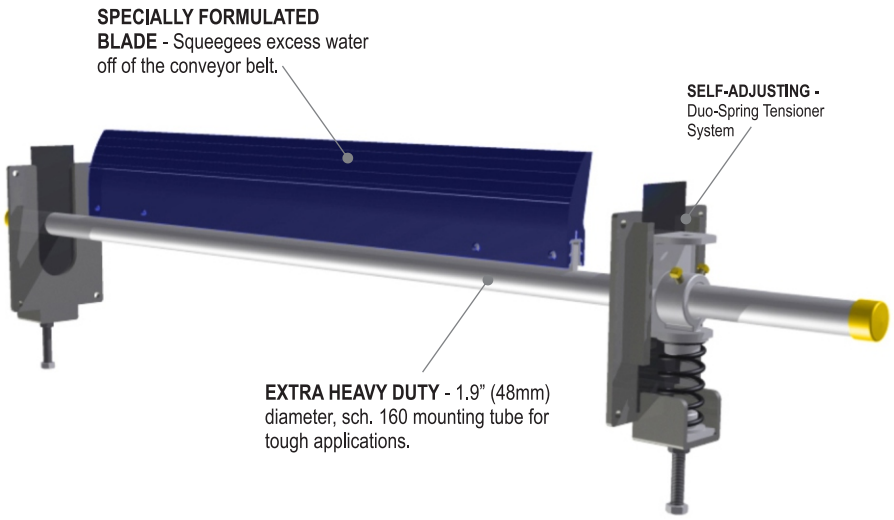

- **Removes excess water** - to ensure a dry carry side of the belt down the belt line.
- **Tensioned** - by either our standard Bolt-up™, Duo-Spring™, Spring-Shoc™ or Air-Shoc™ tensioner for constant blade pressure, reducing blade re-tensioning maintenance and ensure high cleaning efficiency throughout the life of the blade. Duo-Spring (patent pending) is a heavy duty, steel spring tensioner that can be either positioned as a "push-up" or "pull-up" configuration depending on your installation mounting requirements.
- **Excellent Performance** - of our patented Dry Wipe Blade design maintains an effective cleaning edge throughout the life of the blade.
- **Quick-Change Blade** - stainless steel pin blade change-out system is a one-minute, no-tool operation.
- **Works well** - with both mechanical and vulcanized splices.

✢ *All belt cleaner tensioners and mounting hardware are constructed from 304 Stainless Steel and all have a life-time guarantee for the life of the belt cleaning system.*

✢ *Conveyor belt conditions, belt speeds, pulley diameters and general conveyor and maintenance conditions should all be considered before selecting the belt cleaner that will be most effectively utilized.*

✢ *Above and underground specialized mounting kits are also available.*

PRODUCT SPECIFICATIONS

Maximum Belt Speed - 1000 fpm (5.0 m/sec)

Application - Underground Mining, Coal Preparation Plants

DRY WIPE™

Spring-Shoc™ Secondary Tensioner

Utilizes a unique patent pending mounting plate that allows the cleaning blade to be spring tensioned in either a pull-up or push-up position. This specially designed configurability features two different mounting options that leave extra clearance above or below the bracket where necessary.

Push up or Pull-up tensioning options

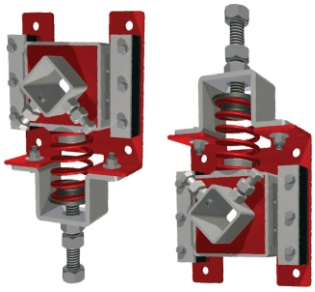

Optional Tensioner: Bolt-up™	Optional Tensioner: Duo-Spring™	Optional Tensioner: Air-Shoc MDX™
• Powder coated steel bracket • 304 stainless steel construction of adj. blocks • Lifetime Warranty	• All 304 stainless steel construction • Lifetime Warranty • Push-up or Pull-up tension option	• Zinc plated steel HD construction • Lifetime Warranty • UHMW slide bushings

Features

- Single spring tensioner for easy and consistent tensioner adjustments while maintaining constant cleaning pressure between the belt and the blade tips.
- Equal tensioning force in either tensioning configuration.
- Integrated dust shield keeps dust and fugitive material within the conveyor chute.
- Rugged construction for years of reliable cleaning.

Dry Wipe™ Belt Cleaner - Blade

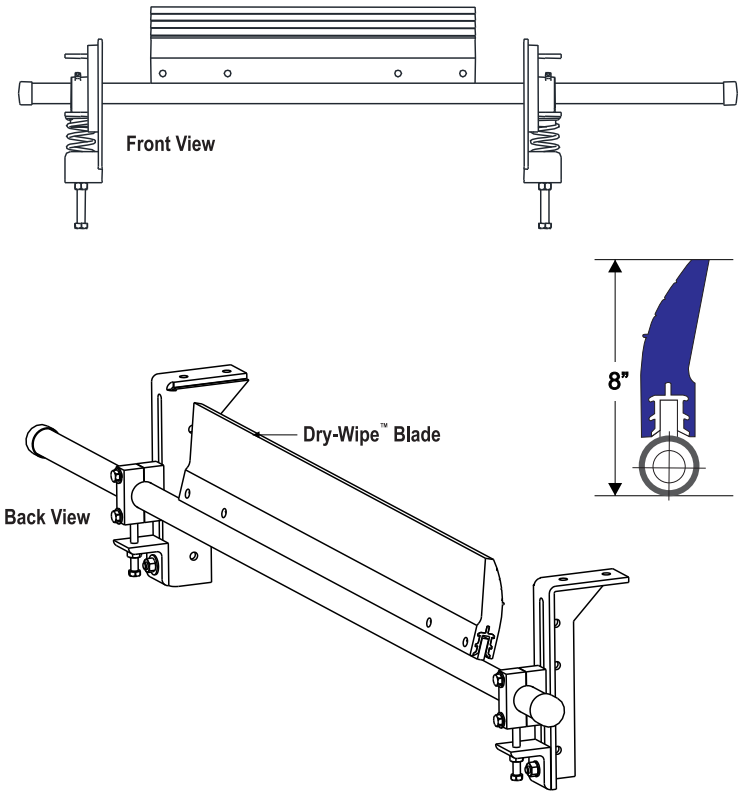

Dry Wipe™ System			
Part Number	Belt Width		Wt. Lbs.
	in	mm	
M-SKDW-SYS-18-**XX**	18	450	94
M-SKDW-SYS-24-**XX**	24	600	101
M-SKDW-SYS-30-**XX**	30	750	107
M-SKDW-SYS-36-**XX**	36	900	114
M-SKDW-SYS-42-**XX**	42	1050	121
M-SKDW-SYS-48-**XX**	48	1200	126
M-SKDW-SYS-54-**XX**	54	1350	133
M-SKDW-SYS-60-**XX**	60	1500	140
M-SKDW-SYS-66-**XX**	66	1600	147
M-SKDW-SYS-72-**XX**	72	1800	154
M-SKDW-SYS-84-**XX**	84	2100	167
Replacement Blade			
Part Number	Belt Width		Wt. Lbs.
	in	mm	
ASG-SDW-18A-1	18	450	9
ASG-SDW-24A-1	24	600	12
ASG-SDW-30A-1	30	750	15
ASG-SDW-36A-1	36	900	18
ASG-SDW-42A-1	42	1050	21
ASG-SDW-48A-1	48	1200	23
ASG-SDW-54A-1	54	1350	26
ASG-SDW-60A-1	60	1500	29
ASG-SDW-66A-1	66	1600	32
ASG-SDW-72A-1	72	1800	35
ASG-SDW-84A-1	84	2100	41

XX: BU (Bolt-Up™ Tensioner)
XX: RSS (Duo-Spring™ Tensioner)
XX: ST (Spring-Shoc™ Tensioner)
XX: AS (Air-Shoc™ Tensioner)

© 6/2015 ASGCO® "Complete Conveyor Solutions"