Allentown, PA USA
TEL: 610-821-0216
FAX: 610-778-8991

INSTALLATION & OPERATION MANUAL
SOFTWARE VERSION 3.50
Model T06 Totalizer

ASGCO Mfg., Inc. 12-20-2012

TABLE OF CONTENTS

DRAWINGS LIST

SAFETY FIRST

The following safety precautions are basic requirements for attending to the equipment, and should ALWAYS be followed.

- Always **disconnect and lock out** electrical power from the service to the equipment before performing any maintenance, repair or service functions.
- Use proper electrical installation wiring and controls consistent with local and national electric codes.
- Be sure equipment is electrically grounded and mounting bolts are secure.
- Keep clothing and hands away from rotating or moving parts while equipment is running.
- Use safety glasses to protect your eyes when inspecting equipment.
- Observe good safety habits at all times. Use care to avoid personal injury or damage to equipment.
- Avoid contact with energized circuits or rotating parts.
- Act with care in accordance with prescribed procedures in handling and lifting the equipment.
- Be sure unit is grounded in accordance with code requirements.
- Be sure children or other unauthorized personnel properly enclose equipment to prevent access in order to prevent possible accidents.
- Provide proper safeguards for personnel against rotating parts.

Be familiar with the equipment and read all instructions thoroughly before installing, operating or working on equipment.

High voltage and rotating parts can cause serious or fatal injury. Qualified personnel MUST perform safe installation, operation and maintenance. Familiarization with and adherence to the National Electric Code and local codes is recommended. It is important to observe safety precautions to protect personnel from possible injury.

⚠ WARNING!
FAILURE TO OBSERVE SAFETY PRECAUTIONS COULD CAUSE PERSONAL INJURY OR EQUIPMENT DAMAGE.

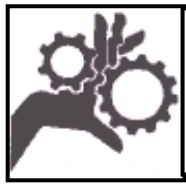

⚠ WARNING!
DO NOT OPERATE WITHOUT GUARDS. ALWAYS TURN OFF POWER TO INSTALL OR SERVICE.

⚠ CAUTION!
HAZARDOUS VOLTAGES EXIST IN THE PRIMARY CIRCUIT.
ALWAYS DISCONNECT POWER PRIOR TO SERVICING.

⚠ CAUTION!
HIGH VOLTAGE AND ROTATING PARTS MAY CAUSE SERIOUS OR FATAL INJURY. ALWAYS TURN OFF POWER TO INSTALL OR SERVICE.

⚠ CAUTION!
BEWARE OF INTERNAL LETHAL VOLTAGES DUE TO CHARGED CAPACITORS, EVEN AFTER AC POWER IS DISCONNECTED. ALLOW A MINIMUM OF 5 MINUTES AFTER DISCONNECTION BEFORE HANDLING!

⚠ WARNING!
DISCONNECT ALL POWER WHILE ADJUSTING UNITS. USE APPROPRIATE LOCK-OUT EQUIPMENT TO PREVENT ACCIDENTAL EQUIPMENT START-UP.

SECTION 1. SCALE FRAME MECHANICAL INSTALLATION

FA77-1 SINGLE IDLER SCALE FRAME

The Model FA77 Scale Frame is designed for both ease of installation, as well as simplicity in expanding and upgrading your scale frame in the field. It is unique in that it is built around a modular concept. This means that even if you bought one style of frame, additional components can be added to upgrade in the future.

1.1 FA77-1 SCALE FRAME MOUNTING: (Ref. Drawing No. 77000I06)

1. Turn off and lockout conveyor prior to installation.

> **CAUTION!**
> FAILURE TO DISABLE POWER TO CONVEYOR COULD RESULT IN SERIOUS ACCIDENT OR INJURY.
> MAKE SURE POWER IS OFF AND SWITCH IS LOCKED-OUT PRIOR TO INSTALLATION!

2. Select existing idler that will be used as the weigh idler. The location of the weigh idler should be approximately **2 seconds of belt travel time** away from the infeed point. This is, of course, dependent upon the belt speed. The weigh idler should ideally also have *3 idlers before and three idlers after the weigh idler*, with a minimum of one idler on either side. The more idlers aligned thru the scale area, the better the performance of the scale. This area of idlers (3 to 7 idlers) is referred to as the weigh area.

3. Lift and block the belt thru the weigh area. Mark the centerline of the scale idler on the conveyor stringers. Mark the center roll of each of the idlers thru out the weigh area with a punch mark at the centerline of the roll.

4. Remove existing idler. Drill or torch (4) 9/16”∅ mounting holes into conveyor stringers as shown on General Arrangement Drawing No. 77000G01.

5. Install two (2) Mounting Brackets using 1/2”∅ Flat Head Screws and associated hardware, supplied with your scale frame. **Make sure that the mounting brackets are squared to conveyor frame and in-line with each other prior to tightening hardware. Load Cell Pods should point in the direction of travel of the carry belt.**

6. The Load Cell Pods are pre-assembled to the Mounting Brackets. Should it be necessary, the pods may be moved to the secondary mounting position on Mounting Bracket. This allows for proper positioning of Idler Clamps to avoid risers on weigh idler.
7. Remove mounting feet from weigh idler with torch.
8. Set idler on top of Two Load Cell Pods, centering across width of conveyor.
9. Install two (2) Idler Clamps using 3/8”∅ x 3” long hex cap screws and lock washers supplied. **DO NOT TIGHTEN**.
10. Run string line thru weigh area across the center rolls of each of the weigh area idlers, tying-off the string line on either end. Make sure string line is tight (no sag between idlers). Additional scale performance may be attained by also running string lines across each of the wing rolls thru-out the scale area, also. This will point out any “twisting” in the conveyor structure. This is primarily needed only when the conveyor is known to be twisted, or the ultimate scale performance is required.
11. Proper alignment is confirmed when the string line is positioned over the punch marks on all of the idlers thru-out the weigh area. If any punch marks do not align with the string line, loosen the mounting hardware on that idler and position idler appropriately across the conveyor stringers.
12. Proper distance between idlers is confirmed by measuring the distance between the centers of each idler throughout the weigh area. Begin with the scale idler (which has already been squared to the conveyor stringers) and measure out to each idler on both sides, confirming that the dimensions are equal on both sides of the conveyor. If not, loosen the mounting hardware on that idler, and position properly, ensuring that the string line alignment is not changed.
13. Proper elevation of each idler is confirmed by lifting the string line throughout the weigh area. If proper, the string should lift off of each of the weigh area idlers at the same time, regardless of where the string line is lifted. Confirm by lifting the string line between each of the weigh idlers. If the string line does not lift off of all of the rolls at the same time, shimming must be performed to bring all weigh area idlers to the same elevation.
14. Once all weigh area idlers are square and true, tighten all hardware, including the scale idler Clamps. *USE CAUTION WHEN TIGHTENING THE IDLER CLAMPS SO AS NOT TO EXERT UNDUE SIDE FORCES ON THE LOAD CELLS*.

1.2 WEIGHT HANGER BAR ASSEMBLY (Ref. Dwg. No. 77000I04 and 77000D10)

(**NOTE:** The Weight Hanger Bar Assembly is supplied as an option to the FA77 Scale Frame. If the FA77 Scale Frame you are installing is not equipped with the Weight Hanger Bar Option, proceed to the next section.)

15. Bolt two (2) Weight Hanger Bar Brackets, one to each load cell pod, with 3/8”∅ Hex Head Cap Screws and Lock washers supplied. Brackets should face each other. Tighten in threaded holes on load cell pods. BE CAREFUL NOT TO APPLY EXCESSIVE TORQUE TO LOAD CELL WHILE TIGHTENING!

16. On conveyor widths of 48” or less, Weight Hanger Bars must be cut to fit, depending on belt width. Use hack saw or torch to remove excess length. Slide two (2) Weight Hanger Bars thru clearance holes on Weight Hanger Bar Brackets. On conveyor widths of 54” to 96”, Weight Hanger Bars must be coupled together with supplied coupler. Once 2 bars are coupled together, bar assembly must be cut to desired overall width.

17. Secure with the lock collars supplied to keep Hanger Tubes from sliding out of holes. Install thru pre-drilled holes.

18. Remove blocking and lower belt into position.

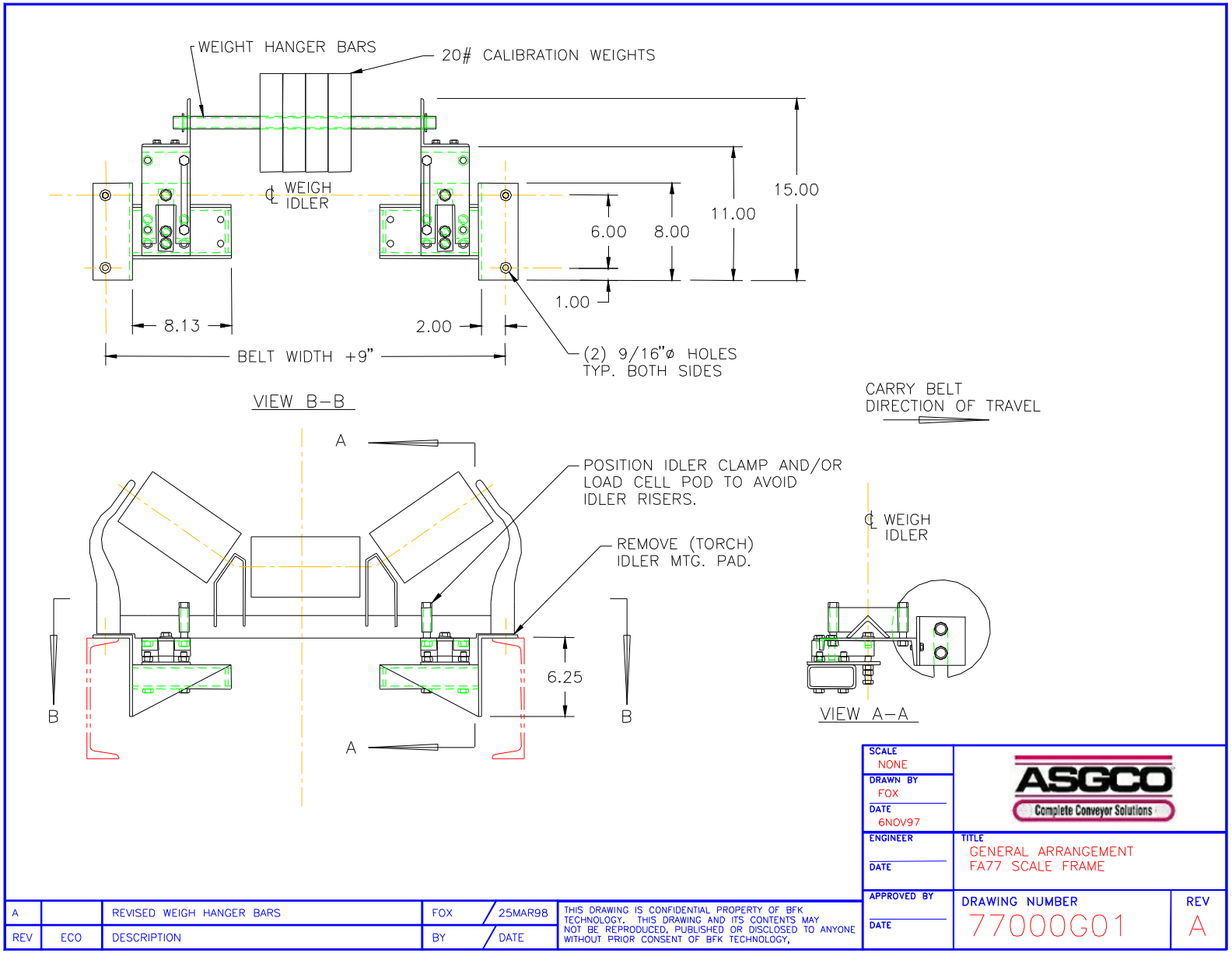
WEIGHT HANGER BARS
20# CALIBRATION WEIGHTS
℄ WEIGH IDLER
15.00
11.00
6.00
8.00
1.00
8.13
2.00
BELT WIDTH +9"
(2) 9/16"ø HOLES TYP. BOTH SIDES
VIEW B–B
CARRY BELT DIRECTION OF TRAVEL
A
POSITION IDLER CLAMP AND/OR LOAD CELL POD TO AVOID IDLER RISERS.
REMOVE (TORCH) IDLER MTG. PAD.
6.25
B
B
A
℄ WEIGH IDLER
VIEW A–A
SCALE NONE
DRAWN BY FOX
DATE 6NOV97
ENGINEER
DATE
APPROVED BY
DATE
ASGCO
Complete Conveyor Solutions
TITLE GENERAL ARRANGEMENT FA77 SCALE FRAME
DRAWING NUMBER 77000G01
REV A
A REVISED WEIGH HANGER BARS FOX 25MAR98
REV ECO DESCRIPTION BY DATE
THIS DRAWING IS CONFIDENTIAL PROPERTY OF BFK TECHNOLOGY, THIS DRAWING AND ITS CONTENTS MAY NOT BE REPRODUCED, PUBLISHED OR DISCLOSED TO ANYONE WITHOUT PRIOR CONSENT OF BFK TECHNOLOGY,

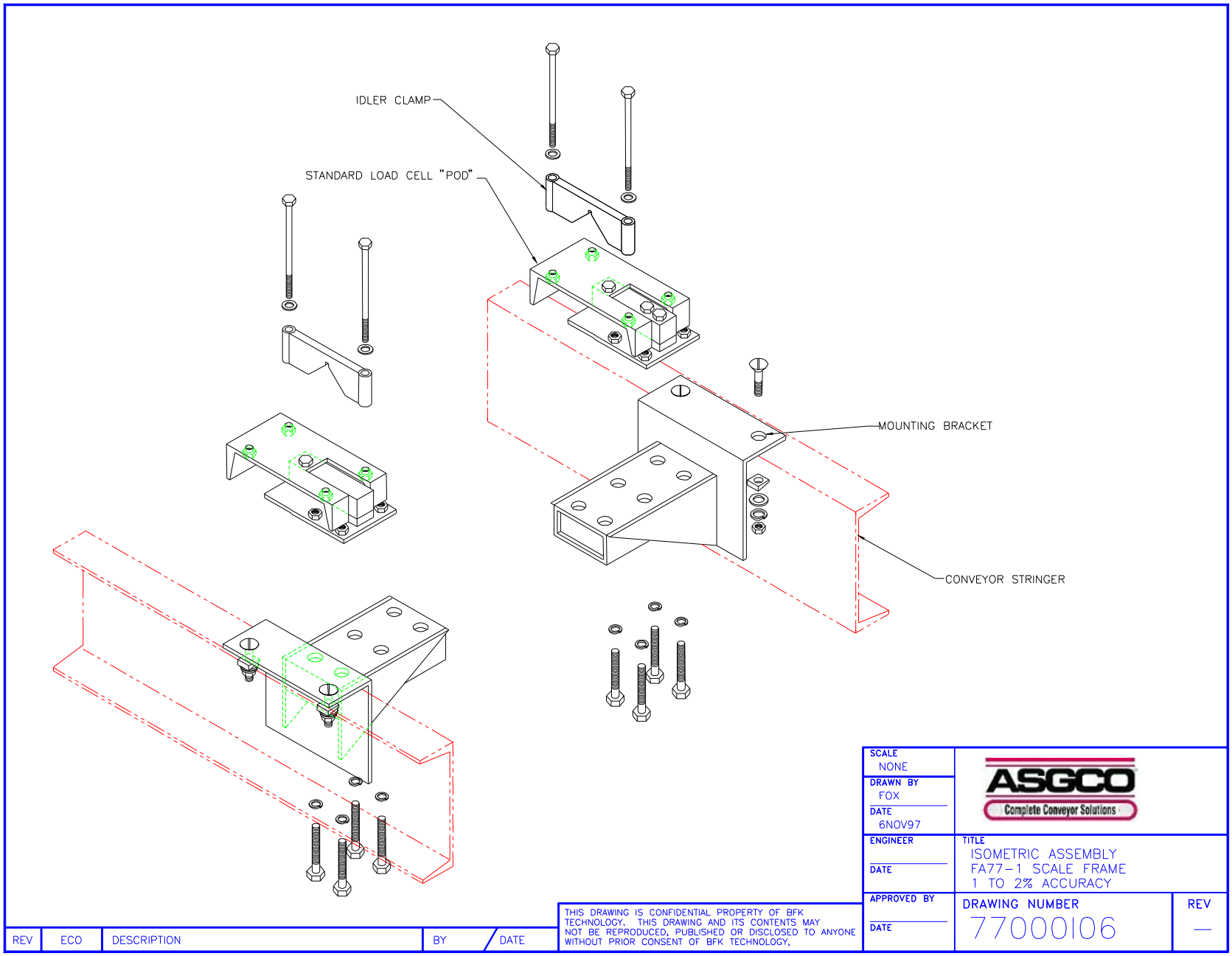
IDLER CLAMP
STANDARD LOAD CELL "POD"
MOUNTING BRACKET
CONVEYOR STRINGER
SCALE
NONE
DRAWN BY
FOX
DATE
6NOV97
ENGINEER
DATE
APPROVED BY
DATE
ASGCO
Complete Conveyor Solutions
TITLE
ISOMETRIC ASSEMBLY
FA77-1 SCALE FRAME
1 TO 2% ACCURACY
DRAWING NUMBER
77000106
REV
—
REV
ECO
DESCRIPTION
BY
DATE
THIS DRAWING IS CONFIDENTIAL PROPERTY OF BFK TECHNOLOGY. THIS DRAWING AND ITS CONTENTS MAY NOT BE REPRODUCED, PUBLISHED OR DISCLOSED TO ANYONE WITHOUT PRIOR CONSENT OF BFK TECHNOLOGY.

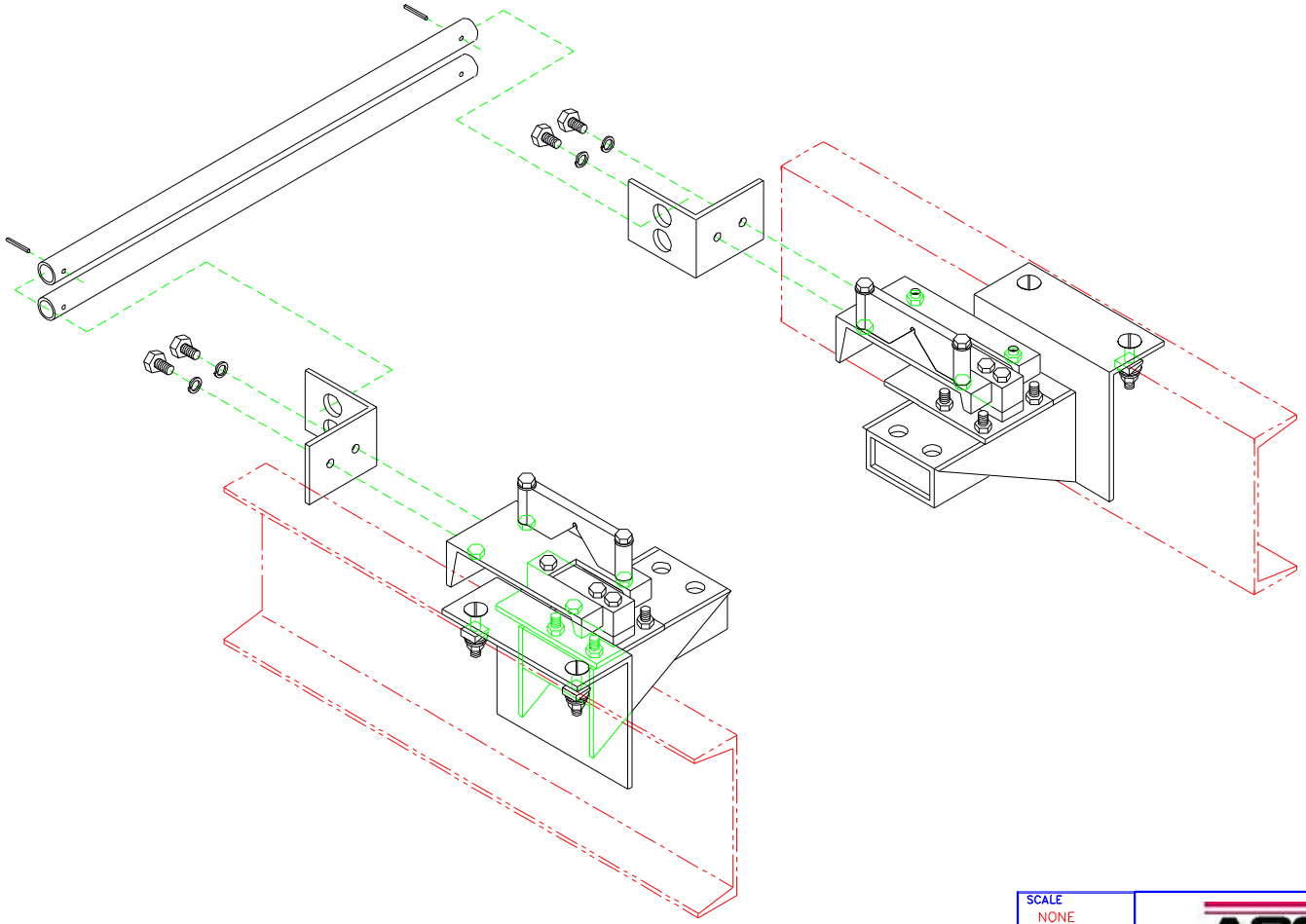

A		UPDATE TO NEW BRACKET DESIGN	FOX	28MAY98	THIS DRAWING IS CONFIDENTIAL PROPERTY OF BFK TECHNOLOGY. THIS DRAWING AND ITS CONTENTS MAY NOT BE REPRODUCED, PUBLISHED OR DISCLOSED TO ANYONE WITHOUT PRIOR CONSENT OF BFK TECHNOLOGY.
REV	ECO	DESCRIPTION	BY	DATE	

SCALE: NONE

DRAWN BY: FOX

DATE: 26NOV97

ENGINEER

DATE

APPROVED BY

DATE

ASGCO Complete Conveyor Solutions

TITLE: ASSEMBLY WEIGHT HANGER BARS FA77 SCALE FRAME

DRAWING NUMBER: 77000104

REV: A

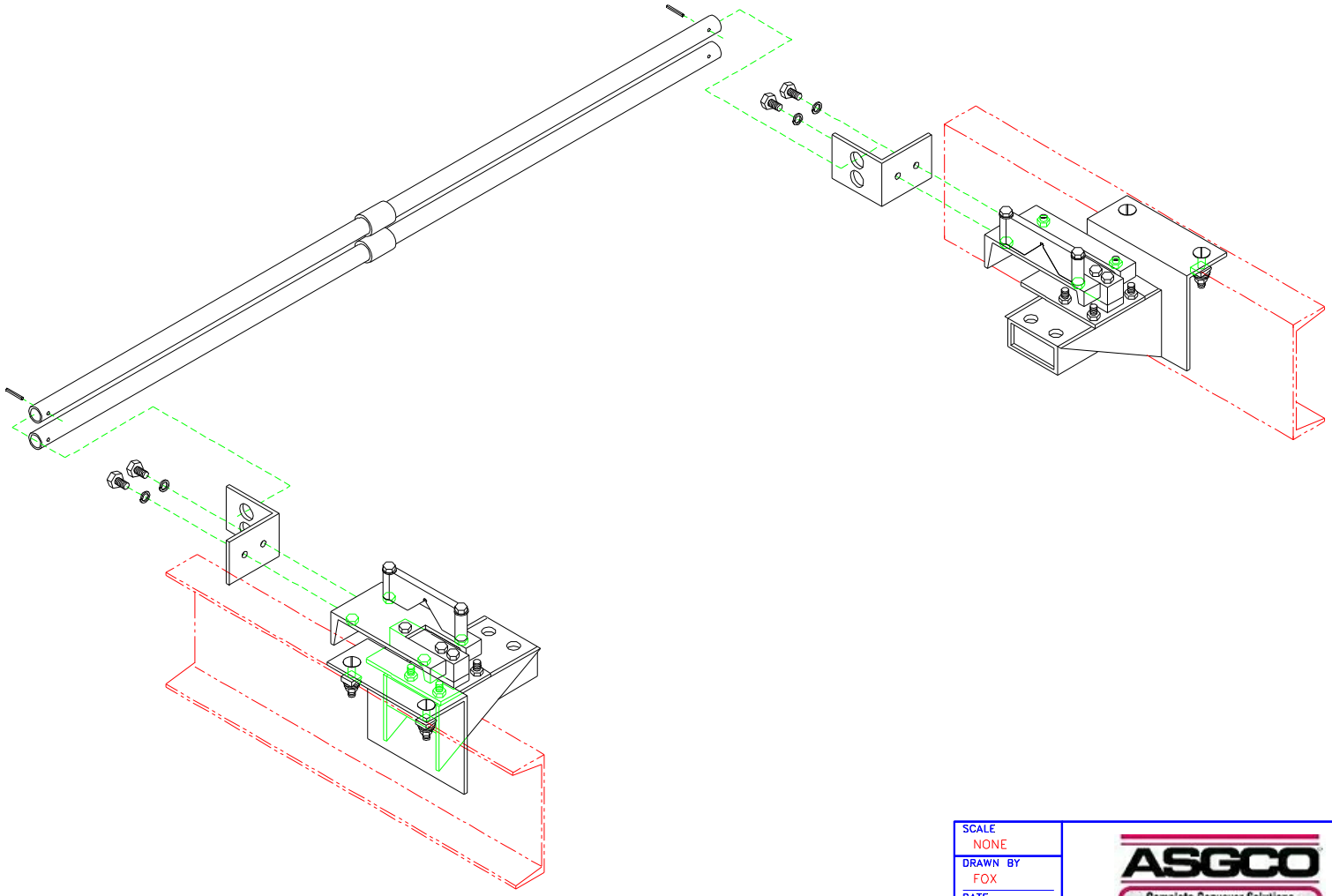

REV	ECO	DESCRIPTION	BY	DATE

SCALE: NONE
DRAWN BY: FOX
DATE: 15FEB99
ENGINEER:
DATE:
APPROVED BY:
DATE:

ASGCO Complete Conveyor Solutions

TITLE: ISO.ASM., WEIGHT HANGER BARS 54"–96" BELT WIDTH FA77 SCALE FRAME

DRAWING NUMBER: 77000D10

REV: —

1.3 MODEL FA77 MULTI-IDLER SCALE FRAMES (Ref. Dwg. Nos. 77000I09 and 77000D11):

The unique design of the Model FA77 Scale Frame allows for multiple scale frames to be coupled together to the same totalizer and speed sensor to create a multi-idler scale frame. Up to three (3) scale frames may be coupled together, creating the following model numbers:
FA77-2 Dual Idler
FA77-3 Three Idler

ALL multi-idler scale frame orders are shipped complete with attached cross-tube for better frame strength and performance.

Mechanically install the first FA77 Scale frame of your multi-idler scale frame as you would in the single-idler version. AT THIS POINT, DO NOT BEGIN ALIGNMENT.

Mechanically install the remaining FA77 scale frames in an identical fashion, with all scale frames spaced at the appropriate idler spacing apart.

After ALL scale frames are mechanically installed, you are ready to perform your alignment procedures as outlined in the single idler scale frame installation section, and repeated here for convenience:

1. Run string line through weigh area across the center rolls of each of the weigh area idlers, tying-off the string line on either end. Make sure string line is tight (no sag between idlers). Additional scale performance may be attained by also running string lines across each of the wing rolls thru-out the scale area, also. This will point out any “twisting” in the conveyor structure. This is primarily needed only when the conveyor is known to be twisted, or the ultimate scale performance is required.

2. Proper alignment is confirmed when the string line is positioned over the punch marks on all of the idlers thru-out the weigh area. If any punch marks do not align with the string line, loosen the mounting hardware on that idler and position idler appropriately across the conveyor stringers.

3. Proper distance between idlers is confirmed by measuring the distance between the centers of each idler thru out the weigh area. Begin with the scale idlers (which have already been squared to the conveyor stringers) and measure out to each idler on both sides, confirming that the dimension is equal on both sides of the conveyor. If not, loosen the mounting hardware on that idler, and position properly, ensuring that the string line alignment is not changed.

4. Proper elevation of each idler is confirmed by lifting the string line thru out the weigh area. If proper, the string should lift off of each of the weigh area idlers at the same time, regardless of where the string line is lifted. Confirm by lifting the string line between each of the weigh idlers. If the string line does not lift off of all of the rolls at the same time, shimming must be performed to bring all weigh area idlers to the same elevation.

5. Once all weigh area idlers are square and true, tighten all hardware, including the scale idler Clamps. *USE CAUTION WHEN TIGHTENING THE IDLER CLAMPS SO AS NOT TO EXERT UNDUE SIDE FORCES ON THE LOAD CELLS.*

SCALE FRAME MECHANICAL INSTALLATION COMPLETE!

NOTE: DO NOT STAND OR WALK ON TOP OF THE CONVEYOR WHERE THE SCALE FRAMEWORK IS LOCATED – YOU WILL DESTROY THE LOAD CELLS.

NOTE: IF YOU MUST WELD IN THE VACINITY OF THE SCALE, INSURE A PROPER GROUND, THE ELECTRICAL INTENSITY WILL DAMAGE COMPONENTS.

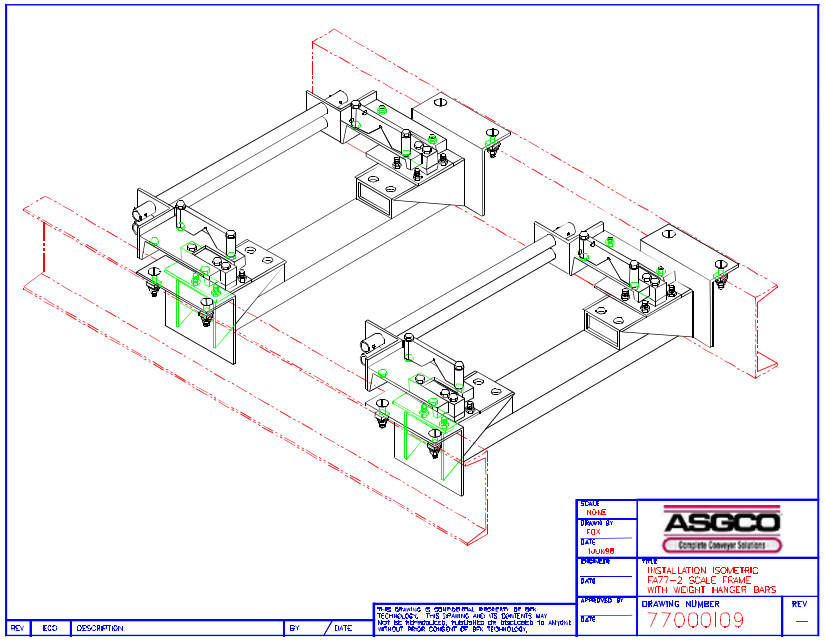
SCALE
NONE
DRAWN BY
FGK
DATE
14JUN98
ENGINEER
DATE
APPROVED BY
DATE
ASGCO
Complete Conveyor Solutions
TITLE
INSTALLATION ISOMETRIC
FA77-2 SCALE FRAME
WITH WEIGHT HANGER BARS
DRAWING NUMBER
77000I09
REV
—
REV
ECO
DESCRIPTION
BY
DATE
THIS DRAWING IS CONFIDENTIAL PROPERTY OF BFX TECHNOLOGY. THIS DRAWING AND ITS CONTENTS MAY NOT BE REPRODUCED, PUBLISHED OR DISCLOSED TO ANYONE WITHOUT PRIOR CONSENT OF BFX TECHNOLOGY.

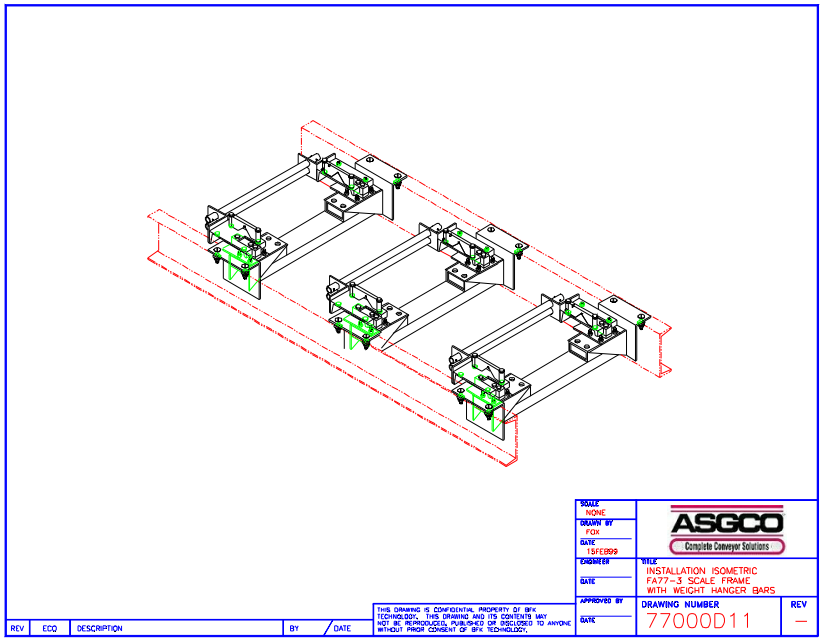
SCALE
NONE
DRAWN BY
FGK
DATE
15FEB99
ENGINEER
DATE
APPROVED BY
DATE
ASGCO
Complete Conveyor Solutions
TITLE
INSTALLATION ISOMETRIC
FA77-3 SCALE FRAME
WITH WEIGHT HANGER BARS
DRAWING NUMBER
77000D11
REV
—
REV
ECO
DESCRIPTION
BY
DATE
THIS DRAWING IS CONFIDENTIAL PROPERTY OF BFX TECHNOLOGY. THIS DRAWING AND ITS CONTENTS MAY NOT BE REPRODUCED, PUBLISHED OR DISCLOSED TO ANYONE WITHOUT PRIOR CONSENT OF BFX TECHNOLOGY.

SECTION 2. SPEED SENSOR MECHANICAL INSTALLATION

2.1 50 PPR SUPPLIED SPEED SENSOR (Ref. Dwg. No. 20000G01)

The basic Model SS Speed Sensor can be equipped in the 05, 10, 20 or 100 versions. All four versions are mechanically identical. The difference between the 4 versions is the number of pulses that the encoder delivers to the totalizer per revolution of the shaft. The 05 delivers 50 pulses-per-revolution (ppr), the 10 delivers 100ppr, the 20 delivers 200ppr, and the 100 delivers 1000ppr. The encoder shipped with your scale was pre-selected at the factory based upon the conveyor criteria that were supplied when the scale system was ordered.

The Speed Sensor is designed to couple to a stub shaft on an existing roller or pulley. **IF YOUR SCALE WAS SUPPLIED WITH THE OPTIONAL WHEEL MOUNT KIT, PROCEED TO THE NEXT SECTION.**

The Speed Sensor should be located on a NON-DRIVEN pulley or roller, such as a tail pulley or snubbing roll, preferably with a large angle of belt wrap on the pulley face. DO NOT mount to a drive pulley, as there is potential for slip between the pulley and the belting, giving improper belt speed signal. The Speed Sensor comes equipped with a interconnection cable, so it should ideally be located within the Totalizer. Further distances will work, however a junction box and extra cable would be necessary for proper installation.

Select the proper roller or pulley, and provide a stub shaft that is 5/8”∅ x 1” Long. This stub shaft should be centered on the end of the shaft to avoid “wobble”. There are various ways to provide the stub shaft onto an existing pulley shaft. Perhaps the best method is to have a cup machined that will slide over the pulley shaft, with the stub shaft machined into it. This requires useable shaft beyond the bearing that is not always available. The cup should be set-screwed to the pulley shaft.

Another method is to drill and tap a 5/8”∅ hole into the end of the shaft, install a 5/8”∅ bolt into the hole, and then remove the hex head with a hack saw, removing the pulley shaft and having a machinist drill and tap the hole, so as to properly locate the hole in the center of the shaft, best accomplish this.

Still a 3rd method, and perhaps the easiest in the field, is to weld a 5/8”∅ x 1” long hex head bolt to shaft end. MAKE SURE THAT THE BOLT IS CENTERED ON THE SHAFT PRIOR TO WELDING IN PLACE.. Once the stub shaft is in place, install the Speed Sensor over the stub shaft. DO NOT TIGHTEN THE SET SCREWS YET.

The housing of the Speed Sensor must be secured to the conveyor stringers so that the entire speed sensor does not spin when the conveyor is turned on. This is accomplished by using one of the four (4) available 0.156”∅ (5/32”∅) thru-holes on the Speed Sensor faceplate.

You will need to bring a rod or pin (such as a drill pin or screw) from the conveyor stringer to the faceplate. After you select the proper rod or pin, locate the spot on the stringer that will align with one of the 4 holes, remove the Speed Sensor, and drill the appropriate hole for installation of the rod or pin.

Install the rod or pin thru the hole on the stringer, ensuring that the rod or pin is long enough to pass thru the faceplate hole. Secure the rod or pin in place, and then re-install the Speed Sensor onto the stub shaft, with the rod or pin passing thru one of the faceplate holes.

Tighten the setscrews on the coupling to the stub shaft.

SPEED SENSOR MECHANICAL INSTALLATION COMPLETE!

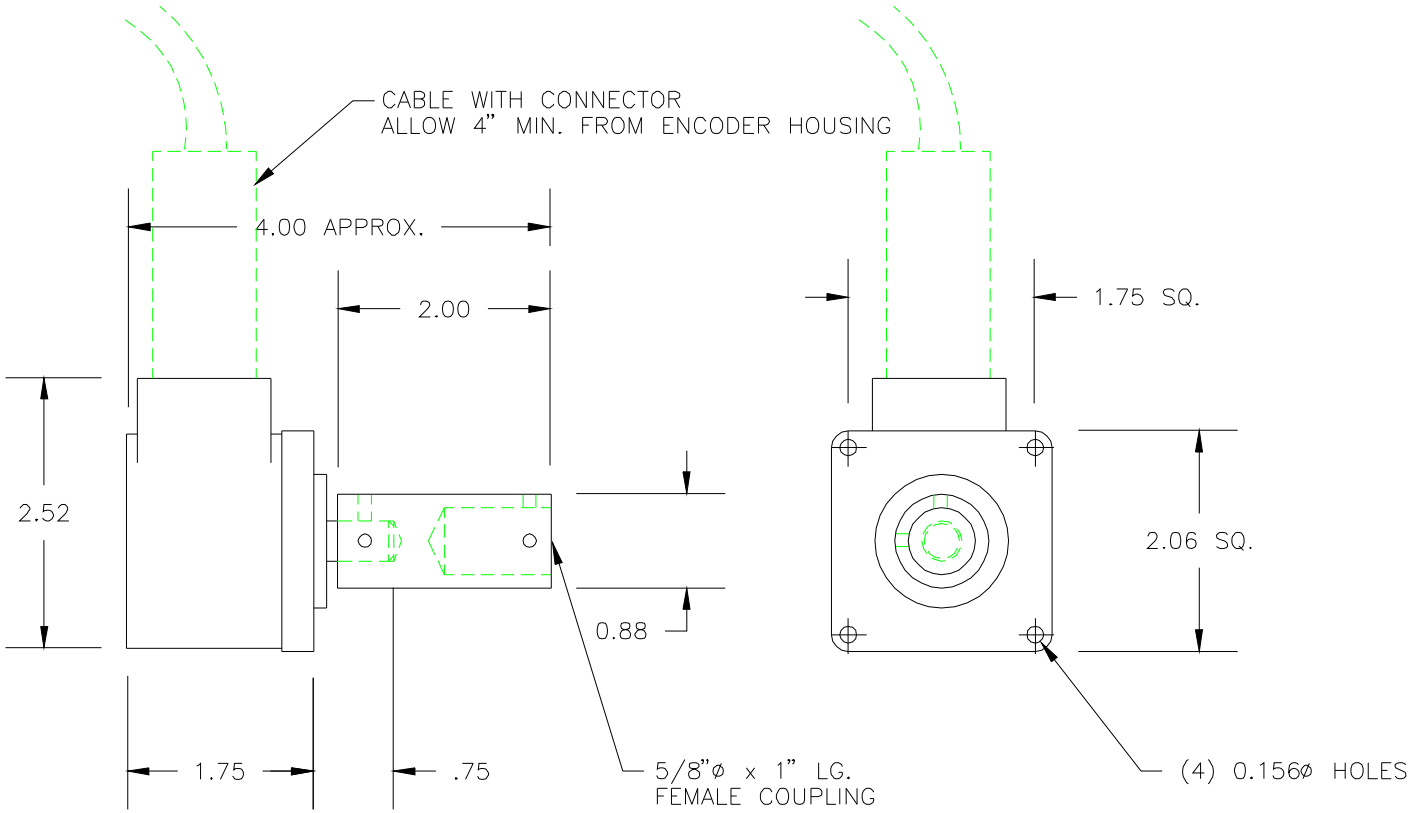

NOTES:
1. SECURE ENCODER HOUSING FROM ROTATION BY USING SCREW THRU ONE OF 4 .156"ø HOLES MOUNTED TO CONVEYOR STRINGER.
2. ENCODER MAY BE POSITIONED IN ANY DIRECTION AROUND SHAFT TO ALLOW FOR CABLE ENTRANCE.

SCALE NONE	ASGCO Complete Conveyor Solutions
DRAWN BY FOX	
DATE 15NOV97	
ENGINEER	TITLE GENERAL ARRANGEMENT SS20 SPEED SENSOR
DATE	
APPROVED BY	DRAWING NUMBER 20000G01 — REV —
DATE	

REV	ECO	DESCRIPTION	BY	DATE

2.2 WHEEL MOUNT KIT for SPEED SENSOR (Ref. Dwg. No. 77000I08)

(NOTE: The Wheel Mount Kit is supplied as an option to the FA77 Scale Frame. If the FA77 Scale Frame you are installing is not equipped with the Wheel Mount Kit Option, proceed to the next section.)

The Wheel Mount Kit allows the Speed Sensor to be mounted directly to the FA77 Scale Frame, and the encoder is coupled directly to a 4” diameter rubber wheel.

The bar used to support the wheel mount assembly is identical to the weight hanger bar, so if your scale system was supplied with both the Weight Hanger Bar Assembly, and the Wheel Mount Kit, you should have received three (3) identical bars. This bar must be cut to fit the belt width of the conveyor. Use torch or hacksaw to remove excess.

Slide the T-Bracket (which has Model SS Speed Sensor already installed) over the bar. Center across bar, and insert two (2) cotter pins to keep T-Bracket from sliding on bar.

Slide the two (2) Brackets over the ends of the bar. Insert cotter pins to keep the bar from sliding out of the holes in the brackets.

Bolt the two (2) Brackets with the supplied hardware to the underside of the FA77 Scale Frame Mounting Brackets, using the remaining unused bolt holes in the tube. (NOTE: The scale frame is pre-drilled with six (6) thru-holes, four (4) of which are used for mounting the load cell pods, leaving two (2) unused holes for bolting the wheel mount kit brackets). The (2) Brackets should face each other.

If installed properly, the wheel-mounted speed sensor should be able to pivot freely about the axis of the bar. The unit should be able to reach to the topside of the return belt, with the 4” diameter wheel sitting squarely upon it.

Connect the supplied cable to the encoder, secure with cable wraps (tie wraps) thru two holes drilled into the side flange of the T-Bracket.

The two additional holes located on the top flange may be used to install an extender (if the 4” diameter wheel does not reach down to the carry belt), or for adding dead weight to help keep the wheel from bouncing while the conveyor is running.

WHEEL MOUNT KIT ASSEMBLY COMPLETE

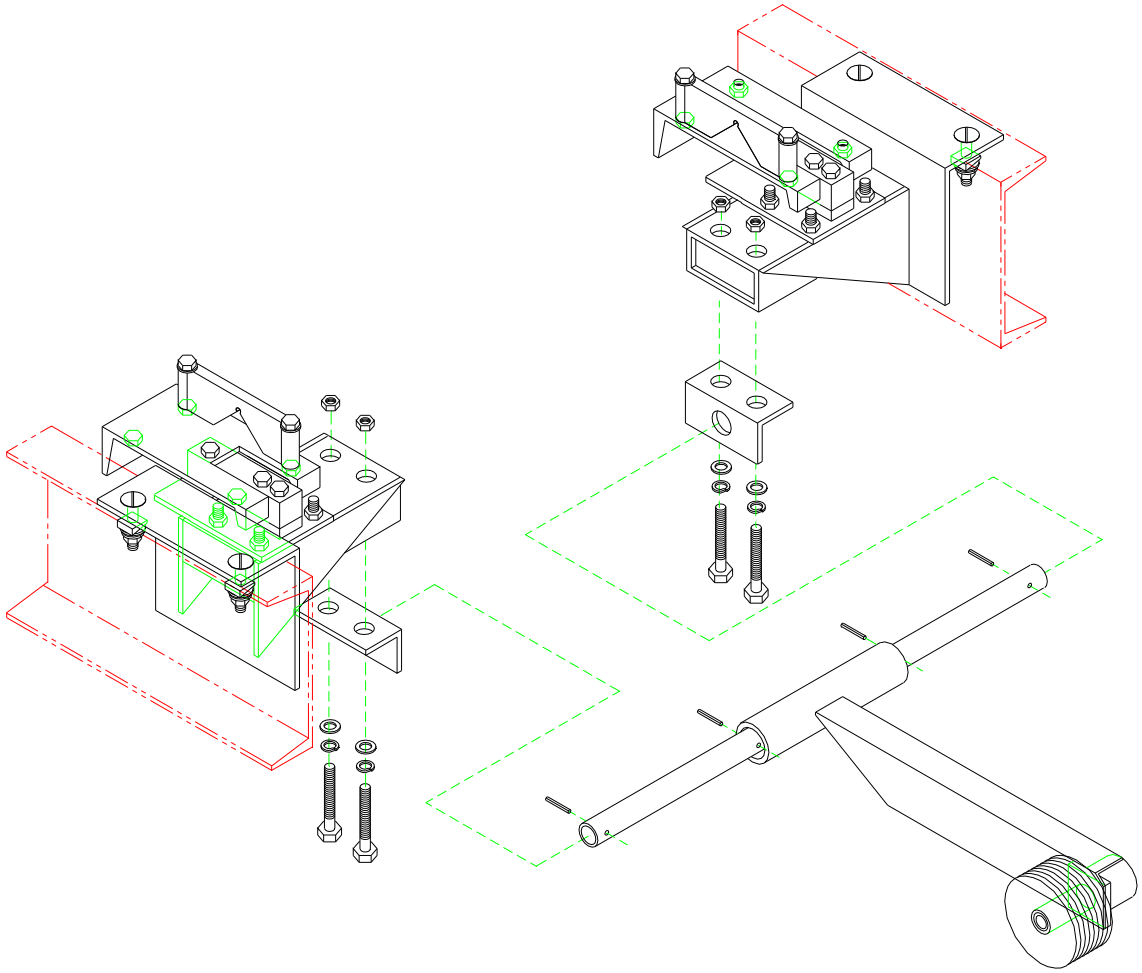

SCALE NONE	
DRAWN BY FOX	
DATE 28MAY98	
ENGINEER	TITLE ASSEMBLY WHEEL MOUNT KIT SPEED SENSOR–FA77 SCALE
DATE	
APPROVED BY	DRAWING NUMBER 77000108 — REV
DATE	

REV	ECO	DESCRIPTION	BY	DATE

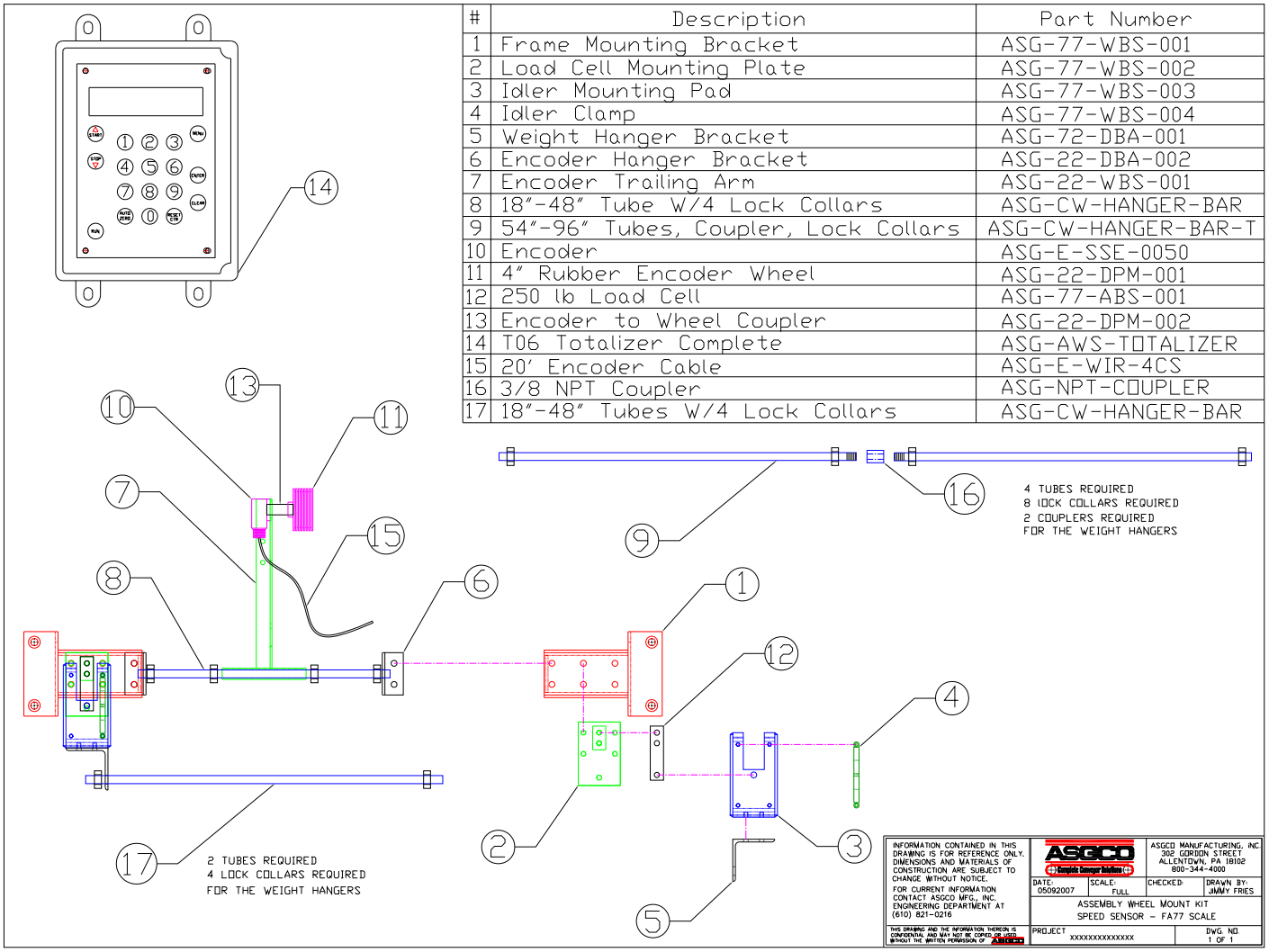

#	Description	Part Number
1	Frame Mounting Bracket	ASG-77-WBS-001
2	Load Cell Mounting Plate	ASG-77-WBS-002
3	Idler Mounting Pad	ASG-77-WBS-003
4	Idler Clamp	ASG-77-WBS-004
5	Weight Hanger Bracket	ASG-72-DBA-001
6	Encoder Hanger Bracket	ASG-22-DBA-002
7	Encoder Trailing Arm	ASG-22-WBS-001
8	18"-48" Tube W/4 Lock Collars	ASG-CW-HANGER-BAR
9	54"-96" Tubes, Coupler, Lock Collars	ASG-CW-HANGER-BAR-T
10	Encoder	ASG-E-SSE-0050
11	4" Rubber Encoder Wheel	ASG-22-DPM-001
12	250 lb Load Cell	ASG-77-ABS-001
13	Encoder to Wheel Coupler	ASG-22-DPM-002
14	T06 Totalizer Complete	ASG-AWS-TOTALIZER
15	20' Encoder Cable	ASG-E-WIR-4CS
16	3/8 NPT Coupler	ASG-NPT-COUPLER
17	18"-48" Tubes W/4 Lock Collars	ASG-CW-HANGER-BAR

SECTION 3. TOTALIZER MECHANICAL INSTALLATION

3.1 T06 TOTALIZER

The Model T06 Totalizer is packaged in a compact NEMA 4X fiberglass enclosure. The use of fiberglass allows for ease of drilling or punching holes into the bottom of the enclosure for conduit entrance, without worrying about the introduction of metal shavings onto the circuit boards. (**NOTE**: The circuit board should be removed from the enclosure prior to drilling conduit entrance holes. Failure to do so may cause damage to the circuit board components if the drill bit should come in contact with any components.) The fiberglass also provides superior protection from water, dust and corrosion, even highly corrosive environments such as salt-water air, sulfur and other environments that would corrode mild steel enclosures.

The Totalizer is provided with four (4) mounting holes. Select a suitable location for mounting the enclosure. Drill four (4) matching holes for use of 1/4”∅ mounting hardware.

Conduit/wiring entrances should be made on the bottom of the enclosure wherever possible. This minimizes the chances of water gaining access to the enclosure, as well as providing the easiest access to the terminal strip.

NOTE: In high vibration areas, the Totalizer should be mounted on rubber strips, or by other means, to dampen heavy vibratory action.

TOTALIZER MECHANICAL INSTALLATION COMPLETE!

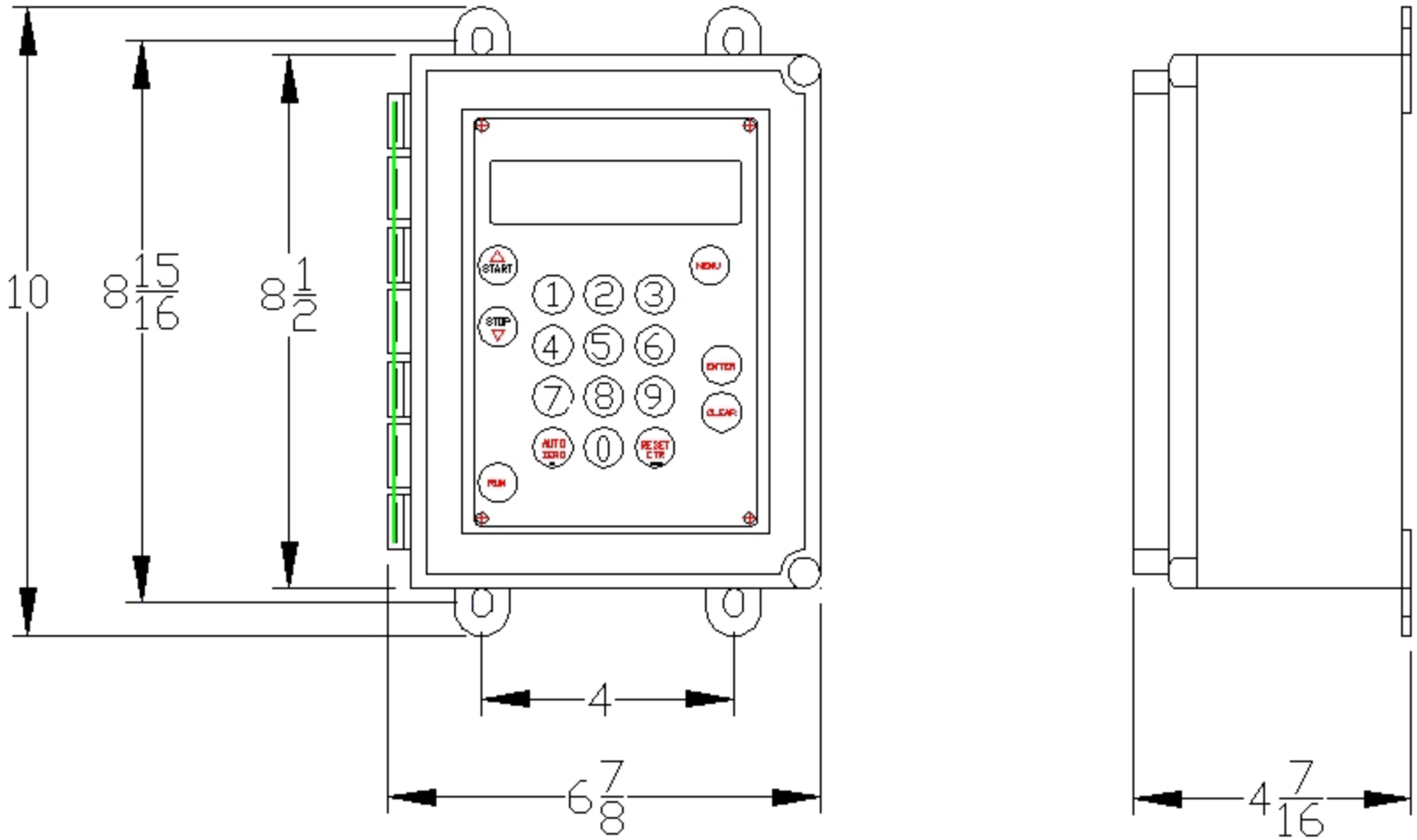
10
8 15/16
8 1/2
START
STOP
MENU
ENTER
CLEAR
AUTO ZERO
RESET CTR
RUN
1
2
3
4
5
6
7
8
9
0
4
6 7/8
4 7/16

SECTION 4. ELECTRICAL INSTALLATION AND FIELD WIRING

All terminal strips are accessed by removing the screws in the upper and lower right corners of the faceplate. The faceplate is mounted to hinges on the left hand side, which allows it to be opened to access the circuit board. Interconnection to the terminal strip is easy, as all terminal blocks are removable from the circuit board. Remove the appropriate terminal block by pulling straight away from the board, connect wiring, and then simply plug the terminal block back onto the board.

Proper codes should always be followed during field wiring. Consult your local certified electrician or inspector if in doubt. Ideally, all cabling should be run thru conduit. The Input Power should **always** be run in separate conduit to avoid possible interference with the low level signals coming from the load cells and speed sensor. Install the proper conduit and run wires from power source to the Totalizer.

IMPORTANT: NEVER run signal wires (load cell, speed sensor, communications, etc.) in same conduit or trough with Power Cables. Locate signal wires as far away as possible from power cables to avoid signal interference!

4.1 BASIC FIELD WIRING

There are three (3) basic interconnections that must be made.

4.1.1 INPUT POWER

Input Power should be brought into the enclosure on the right hand side for easiest access to the terminals. Input Power can be 85-264 VAC, 47-440 Hz. Total amperage draw is a maximum of 1A @ 115VAC. There is no need to select input voltage, as The Power Supply Board will automatically sense incoming voltage.

4.1.2 LOAD CELL INTERCONNECTION

The load cells come with 20 feet of interconnection cable. If the Totalizer is located further than this from the Scale Frame, a junction box should be used for extending the load cell cable to the Totalizer. A junction box is NOT provided with the scale system, and is usually available from a local electrical supply house. Load cell voltages are low level, 10VDC max. excitation, 30mV max. signal.

4.1.3 SPEED SENSOR INTERCONNECTION

The Speed Sensor comes equipped with an interconnection cable. If the Totalizer is located further than this from the Speed Sensor, a junction box should be used for extending the speed sensor cable to the Totalizer. A junction box is NOT provided with the scale system, and is usually available from a local electrical supply house, or from the Factory. Speed Sensor voltages are low level, 5VDC max. (600 feet max cable length)

4.2 OPTIONAL FIELD WIRING

Various optional outputs are available on the T06 Totalizer. These need only be wired to if that particular output signal is desired. Wiring to these signals should **never** be run in conduit shared by input power or other high voltage signals.

4.2.1 REPEAT TOTALIZER

The T06 Totalizer is equipped with a solid-state repeat relay. The relay provides a dry contact closure for each count on the T06 Totalizer. This is a normally open contact that closes for each total count. DS8 Red LED will illuminate with each pulse (count). This output is used to drive a remote counter, large digital display, load-out or batch control, or other devices where the TOTAL quantity of product passing over the scale needs to be monitored or controlled. A slave relay is not necessary as long as the load is less than 0.120 amps. In applications where a slave relay is required, a solid-state slave relay is recommended to eliminate moving parts and EMI/RFI generation. Also, the solid-state relay is arc free. Mount relay/base in separate enclosure.

4.2.2 COMMUNICATIONS

The T06 Totalizer is equipped with an RS232 Communications Serial output. The communications output may be used in one of two modes, PRNT and DSP (Remote). When operating in the PRNT mode, this signal would typically be used for interconnection to a ticket printer. The signal transmits the following information when connected to a ticket printer: Initial Total, Final Total and Total Quantity (See PRINT ENABLE below).

When operating in DSP mode, the communications signal may alternately be used to view the display screen from a remote location, such as a PC. This requires an additional serial port on the PC. To select either operation, access Outputs in the Scale Setup Menu.

4.2.3 PRINT ENABLE

This signal must be wired to the ticket printer when the RS232 Communications Signal is used to drive a ticket printer in the PRNT mode. It enables the RS232 output to deliver both the Initial Weight and Final Weight to the printer. Typically, the PRINT button on the printer is wired into these 2 terminals. The Communications signal will then print the information immediately after the PRINT button is depressed.

4.2.4 CURRENT OUTPUT

The T06 Totalizer is equipped with an Isolated Current Output, 4-20mADC, 400Ω impedance at 20mA. This signal is proportional to Scale Capacity, such as tons-per-hour. It requires a 2-cond. cable.

ELECTRICAL INSTALLATION AND FIELD WIRING COMPLETE!

ALL OTHER WIRES NOT TO BE USED

SPEED SENSOR WIRING			
TERMINAL	DYNAPAR NOT USED	BEI PHASING OUT	SICK INC.
COMMON	BLACK	BLACK	BLUE
SIGNAL A	BROWN	YELLOW	WHITE
+5 VOLTS	RED	RED	RED
SHIELD	GREEN/BLACK PAIR	BARE WIRE	BARE WIRE

LOAD CELL MANUFACTURER		
TERMINAL	ARTEC INDUSTRIES	COTI GLOBAL (supplied)
– EXC	BLACK	BLACK
+ EXC	RED	GREEN
– SIG	WHITE	RED
+ SIG	GREEN	WHITE

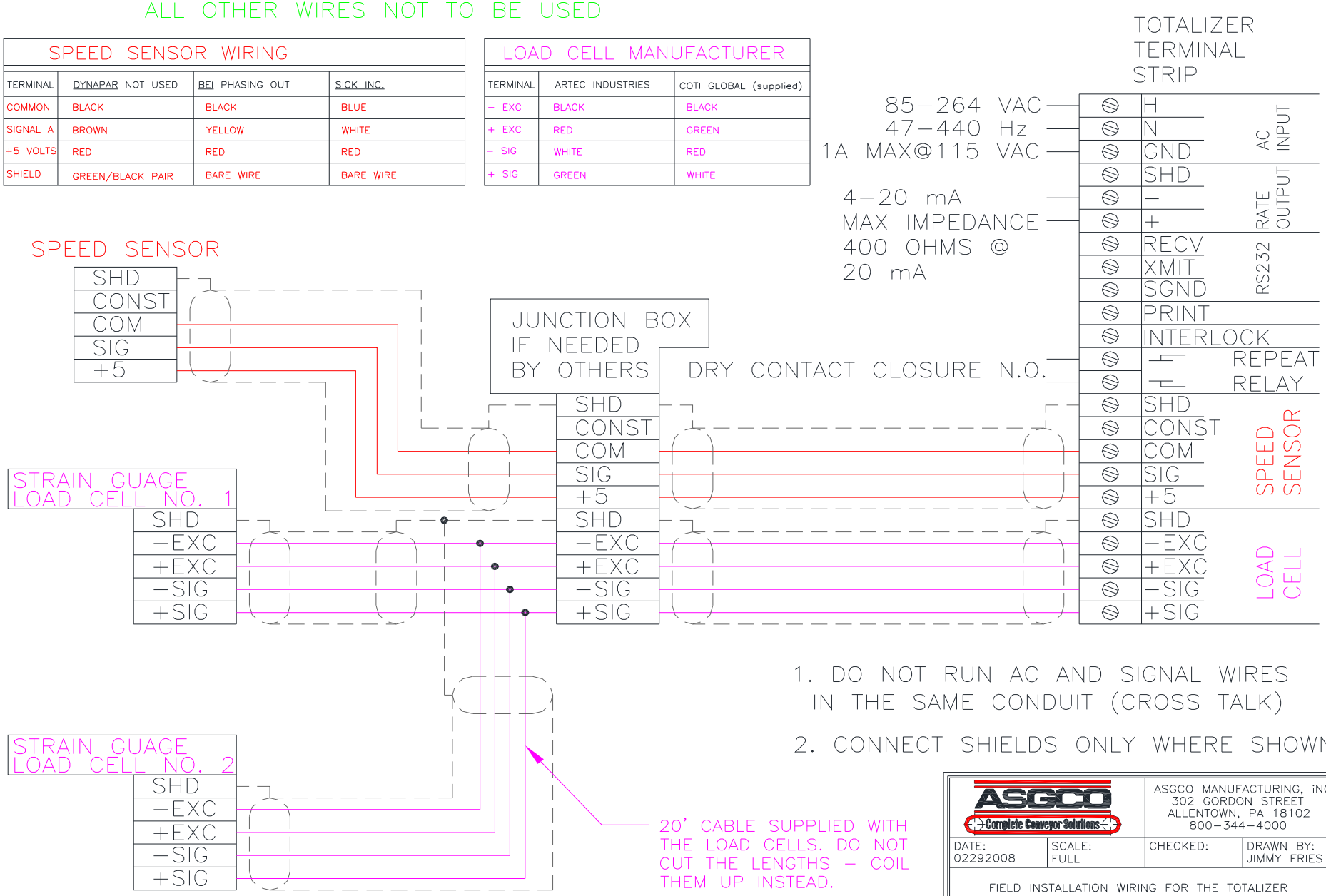

1. DO NOT RUN AC AND SIGNAL WIRES IN THE SAME CONDUIT (CROSS TALK)

2. CONNECT SHIELDS ONLY WHERE SHOWN

ASGCO Complete Conveyor Solutions

ASGCO MANUFACTURING, INC.
302 GORDON STREET
ALLENTOWN, PA 18102
800–344–4000

DATE: 02292008	SCALE: FULL	CHECKED:	DRAWN BY: JIMMY FRIES

FIELD INSTALLATION WIRING FOR THE TOTALIZER

PROJECT

DWG. NO. 06–FIW–001

SECTION 5. SOFTWARE

The Model T06 Totalizer Software is written in user-friendly, menu-driven displays that will prompt the user thru the operations and set-up of the system.

In the text that follows, the following symbols are used:

➢ **Indicates that the display automatically scrolls to the following screen without user input.**

✷ Flashing icon-indicating test in progress.

Upon first applying power, the display will read

```
FIRMWARE
VER: 3.50
```

➢

```
MEMORY TEST
SCAN PASSED
```

➢

```
MAIN MENU
CALIBRATION MENU
```

At this display, the user has the options of performing scale calibration (Calibration Menu), scale set-up (Scale Setup Menu), accessing various internal parameters (View/Modify Menu), or accessing options (Options Menu). The up and down buttons on the keypad will allow the user to scroll thru these four sub-menus, as follows:

```
MAIN MENU
CALIBRATION MENU
```

Up

```
MAIN MENU
SCALE SETUP MENU
```

Up

```
MAIN MENU
VIEW/MODIFY MENU
```

Up

```
MAIN MENU
OPTIONS MENU
```

By pressing the down button, the user may scroll thru the various sub-menu selections in reverse order.

SOFTWARE TREE

This is a layout of the menus, sub-menus, sub-sub-menus and parameters found within the T06 Software.

From the Main Menu, any of the four sub-menus may be accessed by using the up or down arrow keys and pressing enter. The top line of the display always shows which menu you are in, with the bottom line displaying the available sub-menus. When the sub-menu you wish to enter is displayed on the bottom line, pressing enter will allow access to this sub-menu. At this point, the top line of the display will show the sub-menu you are in, with the bottom line displaying the available sub-sub-menus.

From any of the Sub-Menus, any of the available sub-sub-menus may be accessed by using the up or down arrow keys and pressing enter. The top line of the display always shows which sub-menu you are in, with the bottom line displaying the available sub-sub-menus. When the sub-sub-menu you wish to enter is displayed on the bottom line, pressing enter will allow access to this sub-sub-menu. At this point, the top line of the display will show the sub-sub-menu you are in, with the bottom line displaying the available parameters or options.

Pressing the MENU button at anytime while scrolling thru will bring you back up one level of menus.

Each of the menus, sub-menus, sub-sub-menus and parameters are discussed in Section 6 below.

The software tree shows the order of the display when pressing the “up” arrow key C to scroll thru.

MAIN MENU	SUB-MENU	SUB-SUB-MENU	PARAMETERS/OPTIONS
Main Menu	Calibration Menu	Zero Calibration	
		Span Calibration	
		Material Test	
		Belt Tracking	
	Scale Setup Menu	Field Data	Units
			Scale Capacity
			Weigh Span
			Calib Weight
			Calib Duration
			Auto Measure
			Belt Length
			Belt Speed
		Outputs	Comm Mode
			Baud Rate
			Rate Damp
			Min Rate
			Max Rate
			I4mA Adjust
			I20mA Adjust
			Total-Remote

WHEN USING METRIC UNITS, RE-RATE SCALE – LOAD CELL SIZE- CHANGE VALUE TO METRIC UNITS.

WHEN USING METRIC UNITS, MODEL NUMBER – SPEED DIAMETER – CHANGE VALUE TO METRIC UNITS.

SEE BELOW IN BOLD

MAIN MENU	SUB-MENU	SUB-SUB-MENU	PARAMETERS/OPTIONS
	View/Modify Menu	**Model Number**	Scale Frames **Speed Diameter** Speed PPR
		System Params	Sftw Version System Test Nameplate
		Re-rate Scale	New Capacity **Load Cell Size** LC Signal Check Re-rate
		Computed Params	Load Value NO. Zero Calib NO. Span Calib Initial Zero Initial Span Speed Ref Value Calib Ref Value Tare Weight
	Options Menu	Adjust Display	Total Incremnt Display Damp Time: HMS Date: YMD Min Totalize
		Rest Counters	RESET SYSTEM!

SECTION 6. SCALE SETUP

6.1 SCALE SETUP SUB-MENU:

Conveyor parameters must be entered prior to Initial Calibration.

To access SCALE SETUP MENU:

```
MAIN MENU
CALIBRATION MENU
```

Up

```
MAIN MENU
SCALE SETUP MENU
```

Enter

6.1.1 FIELD DATA SUB-SUB-MENU AND BASIC SCALE SETUP:

```
SCALE SETUP MENU
Field Data
```

Enter

(This is the starting point for initial scale setup.)

```
Field Data
 Units
```

Enter

"Units" allows user to select the units that the rate display will read in.

```
 Units
  Tons/hour
```

Up

Scrolling with the up- and down-arrow buttons shows available choices.

Default "Short" Tons per hour (2000#/Ton)

Other available options:

LongTons/hr	Long Tons per hour (2200#/Ton)
Pounds/hr	
Pounds/min	
tons/hr	Metric Tons per hour (2240#/Ton)
kg/hr	
kg/min	

```
 Units
  Tons/hour
```

Enter ➢ Select desired units, press ENTER. Selected units are carried thru to all of the remaining items. Automatically scrolls to SCALE CAPACITY.

```
FIELD DATA
 Capacity
```

Enter

Press ENTER to access CAPACITY.

```
Scale Capacity
□□□□□ Tons/hour
```

➢

Enter maximum scale capacity rate (including decimal point), press ENTER. Scrolls to WEIGH SPAN.

```
FIELD DATA
 Weigh Span
```

Enter

Press ENTER to access WEIGH SPAN.

```
Weigh Span
 □□□□□ Ft
```

➢

Enter weigh span (including decimal point), press ENTER.

Weigh Span is defined as the length of belt supported by the weigh idler(s). This is equal to the idler spacing in the scale area on a single idler scale system. Scrolls to CALIB WEIGHT.

```
FIELD DATA
 Calib Weight
```

Enter

Press ENTER to access CALIB WEIGHT.

```
Calib Weight
 □□□□□ lb
```

Enter ➢

Enter the TOTAL WEIGHT of calibration weights supplied with the scale system, press ENTER. If no weights were supplied, or will not be used, leave default value entered (Default is 100#). Scrolls to CALIB DURATION.

```
FIELD DATA
 Calib Duration
```

Enter

Press ENTER to access CALIB DURATION. This is the length of the calibration test defined as belt revolutions.

```
Calib Duration
 □□□□□    rev
```

Enter ➢

Enter the length of calibration test duration in NUMBER OF REVOLUTIONS press ENTER. Scrolls to AUTO MEASURE.

```
FIELD DATA
Auto Measure
```

Enter

Auto Measure will automatically measure both the length and speed of the belt.

```
Auto Belt Calc
 Start At Ref
```

Start

Find or make a reference mark on the conveyor belting. This could be a belt splice, or paint marking. Select a reference point on the conveyor, such as the weigh idler or other location where you can see when the belt mark passes the reference point. With the belt running empty, press the **START** button on the keypad when the belt mark passes the reference point.

```
Prs STOP After ✷
  1 Belt Cycle
```

Stop

<u>After ONE complete revolution</u> of the belt, press **STOP** when the belt mark passes the reference point. The upper right corner of the display shows a flashing icon ✷ while the test is in progress.

```
L:□□□□□ ft
S:□□□□□ ft
```

Enter ➢

Display shows L (belt length) and S (belt speed). To accept data, press ENTER. *System automatically scrolls to INITIAL ZERO*, unless ERROR message is displayed.

```
NO SPEED INPUT
CHECK SENSOR!!
```

Error message is displayed if speed sensor signal was not operating properly. Check all wiring and termination to ensure proper interconnection. If all wiring is proper, see TROUBLESHOOTING GUIDE.

If AUTO MEASURE will not be used, and the user wishes to enter BELT LENGTH and BELT SPEED manually, simply hit the up arrow button at the AUTO MEASURE screen, system scrolls to:

FIELD DATA Belt Length	Enter	Press ENTER to access BELT LENGTH.
Belt Length □□□□□ Ft	Enter, Up	Enter BELT LENGTH, press ENTER. ONLY ENTER IF YOU CHOSEN NOT TO USE AUTO MEASURE.
FIELD DATA Belt Speed	Enter	Press ENTER to access BELT SPEED
Belt Speed □□□□□ Fpm	Enter, Up	Enter BELT SPEED, press ENTER. ONLY ENTER IF YOU CHOSEN NOT TO USE AUTO MEASURE.

THIS METHOD <u>MUST</u> BE USED ON SYSTEMS NOT SUPPLIED WITH A SPEED SENSOR!

6.1.1A NON-SPEED COMPENSATED SYSTEMS

Some users prefer the option of using the scale without a speed sensor. This is referred to as a non-speed compensated system. In order for the scale to perform properly, ***<u>a jumper wire must be installed on the main terminal strip between the CONST (Constant) and COM (Common) terminals</u>*** on the Speed Sensor terminal block. This option should only be employed on conveyors that are running at constant speed. Large errors will occur on systems installed in conveyors that can operate at variable speed, when used without a speed sensor!

After proper entry of BELT LENGTH and BELT SPEED using AUTO MEASURE, system scrolls to the Calibration Menu:

NOTE: When BELT LENGTH and BELT SPEED are manually entered, user must press MENU to return to the Main Menu and access the Calibration Menu.

```
Calibration Menu
Zero Calibration
```

Enter

Press Enter to access Zero Calibration routine.

```
ZERO        35000
Enter To Begin
```

Enter

With belt running empty, press ENTER.
Begins Initial Zero Calibration. This makes the scale read “0” with the belt running empty, eliminating the tare weight that the scale is sensing (idler and belt weight). YOU DO NOT NEED TO WATCH FOR BELT MARK AND REFERENCE POINT. BEGIN AT ANYTIME.

```
ZERO CALIB      ✷
 □□□□□ count
```

Display indicates digital count value of tare weight.

```
ZERO       0.00%
Enter To Save
```

Enter

Displays percent error, which will be 0.00% on initial zero.
IF THE PERCENT ERROR IS ANYTHING OTHER THAN 0.00%, YOU ARE NOT DOING AN INITIAL ZERO CALIBRATION! THIS INDICATES THAT THE SCALE HAS BEEN PREVIOUSLY CALIBRATED. GO BACK AND DO A SYSTEM RESET, AND START FROM BEGINNING.
If display shows 0.00%, press ENTER to accept and continue with AUTO SPAN.

CAUTION!
AT THIS POINT IT IS RECOMMENDED THAT THE CONVEYOR BE TURNED OFF PRIOR TO CONTINUING. FAILURE TO DO SO COULD RESULT IN SERIOUS INJURY!

Apply calibration weights to weight hanger bar on scale frame.

```
SPAN     60000
Enter To Begin
```

Start

Turn conveyor on again, and run empty with weights applied, prior to pressing START button.

```
SPAN CALIB     ✷
  □□□□□  count
```

Display indicates digital count value of calibration weights.

```
SPAN       0.00%
Enter To Save
```

Enter

Displays percent error, which will be 0.00% on initial span.

IF THE PERCENT ERROR IS ANYTHING OTHER THAN 0.00%, YOU ARE NOT DOING AN INITIAL ZERO CALIBRATION! THIS INDICATES THAT THE SCALE HAS BEEN PREVIOUSLY CALIBRATED. GO BACK AND DO A SYSTEM RESET, AND START FROM BEGINNING.

If display shows 0.00%, press ENTER to accept. System automatically goes to the RUN Mode, ready to run product.

```
R  □□□□□  TPH
T  □□□□□  Tons
```

System automatically changes to the RUN mode. At this point, since the calibration weights are still applied, the display will show the Rate equivalent of the weights, and begin Totalizing.

CAUTION!
AT THIS POINT IT IS RECOMMENDED THAT THE CONVEYOR BE TURNED OFF PRIOR TO CONTINUING.
FAILURE TO DO SO COULD RESULT IN SERIOUS INJURY!

REMOVE THE CALIBRATION WEIGHTS FROM THE SCALE FRAME. TURN CONVEYOR ON. RUN BELT EMPTY.

```
R  0.0      TPH
T  □□□□□    Tons
```

System still in the RUN mode.
If calibration is proper, display should read near 0 TPH and should not be counting. Variations in the rate display (TPH) are expected, as the scale is sensing variations in the weight of the belt (such as a splice). A small number of stray counts may also appear on the main counter, again due to variations in belt weight, or other factors.

In the RUN Mode, user may scroll thru various displays by pressing the Up or Down buttons, as follows (from above rate/totals display):

```
L      □□□  lb/f
S           ft/m
```

Displays Belt **L**oading in pounds-per-foot (or other units as selected).
Displays Belt **S**peed in feet-per-minute (or other units as selected).

```
Sub Total
              T
```

Sub-totals Counter. THIS IS THE RUNNING MAIN COUNTER

Pressing Up button at this point will return user to Rate/Totals display. Pressing Down will scroll through these displays in reverse order.

BASIC SCALE SETUP IS NOW COMPLETE!

6.1.2 OUTPUTS SUB-SUB-MENU AND ADVANCED SCALE SETUP:

Advanced Setup allows user to access various output signals, such as a rate output (4-20mA), repeat relay or RS232. There are eight (8) options accessible.
These outputs are found in the SCALE SETUP SUB-MENU, OUTPUTS sub-sub-menu.

From MAIN MENU, press up-arrow to scroll to SCALE SETUP, press ENTER.
Press up-arrow to scroll to OUTPUTS, press ENTER.

6.1.2.1 RS-232 SET-UP:

COMM MODE

Communications mode is used for setup of an RS232 output communications signal. When 1 is selected, and a print contact is momentarily closed across Print terminals on circuit board, the system sends a ticket printer format to the serial port connection. The format of the message is as follows:

MWT FINAL:	XXXX	T	Final Master Weight Total, in T or other selected units
MWT INITIAL:	XXXX	T	Initial Master Weight Total, in T or other selected units
MWT TOTAL:	XXXX	T	Total Master Weight Total, in T or other selected units

When 2 is selected, the user can view the T06 Display Screen on a remote terminal, such as a PC. PC Protocol must be followed to ensure proper connection and setup. Contact factory for protocol and PC settings.

BAUD RATE

This variable is used to maintain the frequency of operation of the RS232 communications link. The link protocol is fixed to 1 stop bit, no parity and 8 data bits. Baud Rates available: 300, 1200, 2400, 9600.

6.1.2.2 4-20mA OUTPUT SETUP: *THIS IS AN ANALOG SIGNAL*

RATE DAMP

This is dampening of the rate (current output) signal, the value is used to slow the response of the isolated output.

MIN RATE

This variable is used to limit the current output to a minimum value, the range of which is 4 ± 2mA..

MAX RATE

This variable is used to limit the current output to a maximum value, the range of which is 20 ± 2mA..

I4mA ADJUST
The system is preset at the factory to set the current output to 4mA for a rate value equal to 0.00% capacity (i.e. TPH). Field adjustments to this signal level are possible by reading the signal level (with a digital volt meter) across the Rate Output Terminals on the board, and entering a value until 4mA is read on the meter.

I20mA ADJUST
The system is preset at the factory to set the current output to 20mA for a rate value equal to 100.00% capacity (i.e. TPH). Field adjustments to this signal level are possible by reading the signal level (with a digital volt meter) across the Rate Output Terminals on the board, and entering a value until 20mA is read on the meter.

6.1.2.3 REPEAT RELAY SETUP: *THIS IS A DIGITAL SIGNAL*

Total-Remote
This allows the user to set the desired resolution of the repeat relay output. The default setting is 100.0, which means that the repeat relay will provide a contact closure (drive a remote counter once) only after the main counter has counted 1000 times.

This number can be changed to any meaningful number. In most cases, the user would like the remote counter to match the main counter. In this case the parameter should be set to 0.1. Now the remote counter will count every time the main counter counts.

Other types of users may wish to count in “hundredweights”. In this case, the parameter should be set to 100. Now the remote counter will count every time the main counter counts 100 times.

ADVANCED SETUP COMPLETED!

SECTION 6.2 CALIBRATION SUB-MENU AND ROUTINE CALIBRATION

Once the scale system is installed and operating properly, it is suggested that the system be routinely calibrated.

As with any scale system, housekeeping of the scale frame is of utmost importance! Product build-up from falling product or dust can and will effect the scale performance. ALWAYS KEEP SCALE FRAME CLEAN AND FREE OF DUST AND DEBRIS.

6.2.1 ZERO CALIBRATION

Routine Zero Calibrations should be performed regularly. With a new installation, it is recommended that the scale be **Zero calibrated at least once-per-week.** Prior to any Zero calibration, remove any dust or debris that has settled on the scale frame.

Zero calibration, simply stated, is making the scale read 0 TPH when the belt is running empty. The Zero calibration, in essence, is allowing the scale to ignore any tare weight, such as from the idler and the belting. Keep in mind, that even a properly functioning scale system will see some fluctuations in the rate display, even after performing the zero calibration. This is because we are still weighing the belt, and will sense such things as the belt splice.

Various factors that will affect the scales Zero setting are wind and weather, temperature fluctuations, belt stretch and other factors. These factors will change the effective belt tension (for example, the belt is stiffer when it is 30° vs. 80°, the wind will blow the belt into or away from the scale idler, etc.). A change in belt tension is detected by the load cells in the scale frame, and will therefore change your zero setting. Keep this in mind on windy, rainy or cold days, or if a new belt has been installed on the conveyor (new belts will stretch). Also, if any maintenance or replacement of idlers is performed in the scale area, this can also affect the zero setting. Simply greasing idler rolls may affect the performance, and a new zero calibration should be performed.

To perform a Zero Calibration: (Run Belt Empty during calibration)

1. From the RUN mode (normal operating mode), press MENU button on the keypad.

2. Display will show: Main Menu
   Calibration Menu

3. Press enter to access the Calibration Menu.

4. The first available choice is Zero Calibration, press enter.

5. Display shows ZERO xxxxx, where xxxxx is a digital display of the target zero setting. Press ENTER to begin.

   When the scale has performed a Zero Calibration, the display will automatically scroll to show the percentage error that it found. Pressing ENTER will automatically adjust your zero setting. Pressing MENU will void any changes to the Zero setting. This is a good way to perform an AS-FOUND test.

   If the error found is outside of the range of the totalizer, the display will show ZERO CALIB OUT OF RANGE. The range of the system is ±12% from the initial zero calibration setting (performed during basic scale setup). The most likely cause of an out of range error is the result of a mechanical change to the scale frame. Again, pay attention to the scale housekeeping, and check the scale to make sure the speed sensor is operating properly. See the Troubleshooting Guide for extensive troubleshooting suggestions.

6. Totalizer now returns to the RUN Mode.

In addition, the Zero Calibration function may be accessed direct from the keypad, without scrolling thru the Calibration Menu (steps 1-3 above). Simply push the "•" button (decimal button), and the display will scroll directly to the Zero Calibration screen. Perform Zero Calibration as described in items 5-6 above. This allows for easy and quick zero calibrations without having to scroll thru repeated screen displays.

6.2.2 SPAN CALIBRATION

Routine Span Calibrations should be performed regularly. With a new installation, it is recommended that the scale be Span calibrated at least once-per-month. As with the zero calibration, the same environmental and housekeeping rules apply.

AT THIS POINT, IT IS RECOMMENDED THAT THE CONVEYOR BE SHUT OFF AND LOCKED OUT PRIOR TO APPLYING THE CALIBRATION WEIGHTS TO THE SCALE FRAME!

To perform a Span Calibration:

1. Apply the calibration weights to the weight hanger bar on the scale frame.

2. Turn on conveyor and run empty during calibration.

3. From the RUN mode (normal operating mode), press MENU button on the keypad.

4. Display will show: Main Menu
   Calibration Menu

5. Press enter to access the Calibration Menu.

6. Scroll up to Span Calibration

7. Press ENTER to access the Span Calibration routine.

8. Display shows SPAN xxxxx, where xxxxx is a digital display of the target span setting. Press ENTER to begin.

   When the scale has performed a Span Calibration, the display will automatically scroll to show the percentage error that it found. Pressing ENTER will automatically adjust your span setting. Pressing MENU will void any changes to the Span setting. This is a good way to perform an AS-FOUND test.
   As with the zero calibration, if the error found is outside of the range of the totalizer, the display will show SPAN CALIB OUT OF RANGE. The range of the system is ±12% from the initial span calibration setting (performed during basic scale setup).

   The most likely cause of an out of range error is the result of a mechanical change to the scale frame. Again, pay attention to the scale housekeeping, and check the scale to make sure the speed sensor is operating properly. Also, check to make sure the proper amount of calibration weights was applied to the scale frame. Confirm by viewing the Calib Weight value in the SCALE SETUP MENU. See the Troubleshooting Guide for extensive troubleshooting suggestions.

9. Totalizer now returns to the RUN Mode.

ROUTINE CALIBRATION COMPLETE!

6.2.3 MATERIAL TEST

In some applications, it is desirable to run a Material Test to check the belt scale accuracy against another reference scale system, such as a truck or rail scale, or weigh bin. The initial zero and span calibrations must have already been performed in order for a Material test to be performed. Subsequently, a routine zero and span calibration should always be performed prior to a material test being run. Also, the reference scale should also be pre-calibrated to ensure proper accuracy.

1. From the Calibration Menu, scroll thru until Material Test is displayed, press ENTER.

2. Display shows CALIB CHECK PRESS START. The belt should be running empty, and then the START button should be pressed. Display shows RUN PRODUCT 0.0 T,.

3. Begin delivering material onto the conveyor over scale. The display begins counting (totalizing).

4. After a sufficient amount of product has been delivered (to the truck, rail car or weigh bin), cut-off the material flow, allowing the belt to run empty again.

5. When the entire product has left the conveyor (been delivered to truck, rail car or weigh bin), press STOP.

6. Display shows:

   CS xxx.x T
   A T

   The top line displays the amount of product that was sensed by the Totalizer (CS = Conveyor Scale), while the bottom line is ready to accept the actual amount (A) as read by the reference scale.

7. When the reference scale reading is known, enter the amount via the numeric keypad (including decimal point), and press ENTER.

8. The display then shows

   ERROR x.xx%
   ENTER TO SAVE

   The top line indicates the calculated error between the belt scale and the reference scale. Pressing ENTER will automatically recalibrate the belt scale system to the material test. If the error is greater than 30%, the display will read OUT OF RANGE ABOVE 30% ABOVE. Press CLEAR to avoid making changes in this case. Display returns to RUN Mode.

If the belt scale is off by more than 30%, the first thing to do is to double check the calibration of both the belt scale and the reference scale to ensure that there was not an error made during calibration.

9. If both scales are calibrated correctly, you must first calculate the percent error manually (from the totals and the reference scale totals).

10. A System Reset must be performed in order to enter new calibration weight target values. Enter all initial scale set-up parameters as you did during initial set-up, EXCEPT the calib weight value.

10. At the CALIB WEIGHT value, increase the original target value by the ***same percentage*** of the material test error, if the *belt scale system was reading* ***lower*** than the reference scale. ***Decrease*** this value by the ***same percentage*** as the material test error if the *belt scale system was reading* ***higher*** than the reference scale.

11. Go back and run routine zero and span calibrations, and then re-run the material test.

6.2.4 BELT TRACKING

Within this sub-menu, you have the option of Auto Zero Tracking.

AUTO ZERO – IF RUNNING EMPTY FOR LONG PERIODS AT A TIME

Auto Zero performs an automatic zero calibration whenever the rate of flow of material on the belt drops below 2% of the rated maximum capacity. Enter a 1 to activate, enter 0 to turn off.

6.3 VIEW/MODIFY SUB-MENU

The View/Modify Menu allows access to the following sub-sub-menus:

6.3.1 MODEL NUMBER

Selecting Model Number allows access to the following parameters:

SCALE FRAMES

Enters the number of scale frames connected to the totalizer. This is needed in multi-idler scale applications to tell the totalizer how many load cells it is sensing. The default is for Single idler scales, 1. Enter 2 or 3 for multi-idler systems.

SPEED DIAMETER = DIAMETER/12
Enters the diameter, in feet, of the wheel, pulley or roller that the speed sensor is connected to. This is required to tell the totalizer the number of pulses per foot of belt travel. The default is 0.333' (4"), which is standard for the Wheel Mount Kit Option.

SPEED PPR
Enters the PPR (pulses-per-revolution) of the speed sensor encoder. The default is 50, for use with the supplied Speed Sensor.

6.3.2 SYSTEM PARAMS

Selecting System Params allows access to the following parameters:

SFTW VERSION
Displays software version installed on totalizer, for troubleshooting.

SYSTEM TEST
This is used to test the functionality of the T06 Totalizer.
Select 1 to initiate a display test of the complete display driver character set. The character values will automatically scroll across the display.
Select 2 to initiate a keypad test. The display will show the internal value of each key as it is pressed. The numeric keys are represented by their value. Run displayed as R, Enter displayed as E, Clear displayed as C, Up-arrow/start displayed as U, down-arrow/stop displayed as D, Menu displayed as M.
Select 3 to display the digital counts from the load cell output.
Press ENTER key to exit any of these tests.

NAMEPLATE
Shows the Serial Number, a useful number for troubleshooting.

6.3.3 RE-RATE SCALE

In certain instances, it may be beneficial or desirable to re-rate the scale system after it has been installed and calibrated. This may be because you have increased the capacity of your system, you increased or decreased the speed of the conveyor, changing the amount of product that it can convey, or the scale was ordered incorrectly.

NEW CAPACITY
Enter the desired new capacity (rate, i.e. TPH)
LOAD CELL SIZE
Enter the TOTAL load cell capacity (i.e., 2-250# load cells requires an entry of 500)

LC SIGNAL
Enter the mV/V rating of the load cells. Check load cell nameplate, or consult factory if in doubt. Standard is 3mV/V.

CHECK RE-RATE
Pressing enter here checks the new calculated rate, and confirms that the load cells installed will not be overloaded or underloaded, and will perform at the new rate.

If the load cells are acceptable for use with the new rate, display shows **New Rate Saved**!, indicating that the new rate is acceptable with the current load cells. Pressing enter automatically updates the system to the new parameters. If the load cells are *not* acceptable with the new rate, display shows CHECK RE-RATE LC TOO SMALL or TOO LARGE to work properly at the new rate.

If the new rate MUST be used, consult factory for new load cells. Otherwise, try a different rate under NEW CAPACITY to see if this will work with the current load cells.

6.3.4 COMPUTED PARAMS
Displays parameters that are computed by the microprocessor, a useful troubleshooting tool.

LOAD VALUE
Displays the maximum pounds-per-foot loading as calculated by the maximum rate and belt speed.

NO. ZERO CALIB
Displays the number of zero calibrations performed since start-up, or the last system re-set.

NO. SPAN CALIB
Displays the number of span calibrations performed since start-up, or the last system re-set.

INITIAL ZERO
Displays the digital count of the initial zero calibration.

INITIAL SPAN
Displays the digital count of the initial span calibration.

SPEED CONSTANT
Displays the calculated pulses-per-foot of belt travel based on Speed Sensor pulses-per-revolution and Speed Sensor Diameter.

CALIB REF
Displays the calculated pounds-per-foot loading when the calibration weights are applied.

TARE WEIGHT
Displays the pounds-per-foot tare weight of the idler and belting. This is what is zeroed out during a zero calibration.

6.4 OPTIONS SUB-MENU

The Options Menu allows access to the following sub-sub-menus:

6.4.1 ADJUST DISPLAY

Allows for adjustments to the display and the data on the display.

TOTAL INCRMNT
Sets the resolution of the totalizer increment of displayed totals. A value of 0.1 would mean the total displayed will count in increments of 0.1. Internal checks within the microprocessor will not allow certain values, depending on the desired capacity. Values that do not work are not saved when entered, in which case the microprocessor automatically calculates and stores it's own value.

DISPLAY DAMP
Enters a value to dampen the movement on the display. [The higher the value, the slower the response of the information on the display.] This parameter only affects the display, and has no effect on internal totalization.

MIN. TOTALIZE
Disables the totals counter from counting when the rate of material flow (i.e. TPH) drops below the percentage entered in. This is useful when the conveyor may run empty for periods of time during production periods, and you do not want the totalizer to run up stray counts.

6.4.2 RESET COUNTERS

Allows user to reset the counters to 0. There are 2 internal counters, Main Total and the Sub Total. Both are viewable from the RUN mode. One may be used as a master, while the other may be reset to keep track of totals produced each shift, each day, each job, etc.

The RESET COUNTERS function is also directly available thru the keypad, without having to scroll thru various menus and sub-menus. Simply press the "-" button (dash button) on the keypad from the RUN mode. Display will scroll directly to RESET COUNTERS.

6.4.3 RESET SYSTEM!

Reset System will *completely eliminate all of the parameters* you have entered into the system during setup, initial and subsequent calibrations, and all other parameters stored into the system.

This should only be used if you want to completely "start over".

1. Pressing ENTER displays "RESET SYSTEM ARE YOU SURE??? ".

2. Pressing ENTER displays "ARE YOU SURE??? ENTER RESET".

3. **PRESSING ENTER AT THIS POINT WILL RESET THE SYSTEM.**
   If, at this point, you decide NOT to reset system, Press MENU twice to cancel System Reset and return to menu.

4. Otherwise, press ENTER to reset the system.

SECTION 7. TROUBLESHOOTING GUIDE

The Troubleshooting Guide will “point you in the right direction” when trying to solve problems with your scale system. It does not, and cannot, cover *all* of the problems you may experience in the field. However, it will give you (and a Service Technician) a good idea of where the trouble may be.

7.1 SIGNAL LEVELS

This section covers the signal levels that can be measured with use of a digital volt meter (DVM). As long as you have a DVM, and know how to use it, you are half way home. The sections are listed in preferred order.

LOAD CELLS (BAD CELLS GIVE READINGS ALL THE TIME & “0” OUT OF RANGE)

A load cell measures resistance. It is a very precise instrument that changes the resistance of a voltage signal as it deflects due to load. ALL load cells have an inherent internal resistance, that is easily measured, and tells us if the load cell is damaged, or not.

To check load cell resistance:

1. Turn conveyor off and disconnect power to totalizer.
2. Measurements should be made on wires integral to load cell, not any extension wires used, such as from a junction box into the totalizer.
3. **Disconnect the wires from any terminal blocks or other wires**.
4. Measure the resistance (Ohms) directly across the ±Signal leads - Signal should be approx. **350Ω.**
5. Measure the resistance directly across the ±Excitation Leads - Signal should be **between 350 and 450Ω.**

6. Measure the resistance directly across the + Excitation and -Signal Leads.
7. Measure the resistance directly across the - Excitation and +Signal Leads. **THESE TWO MEASUREMENTS SHOULD BE THE SAME (OR CLOSE).**

If any of the measurements are outside of the expected signals, the load cell is bad and should be replaced.
If a junction box or extension wires are used, repeat these measurements at the totalizer.
To check the load cell signal:

1. **Turn conveyor off, apply power to totalizer**.
2. Measure the excitation voltage across the ±Excitation terminals on the terminal strip on the totalizer board. Signal should be almost 10VDC.

Measure the voltage across the ±Signal terminals on the terminal strip. Signal should be 30mV or less. If signal is above 30mV, either load cell is bad, or severely undersized for the application, and should be replaced.

SPEED SENSOR (CHECK WIRES & IS IT TURNING)

1. Turn conveyor on, apply power to totalizer.
2. Make sure Red LED DS7 is illuminated.
3. Measure the voltage across +5 and COM on the terminal strip. Signal should be **5V**. If signal is not 5V, problem exists on the totalizer board.
4. Measure the voltage across SIG and COM on the terminal strip. Speed sensor provides a +5V output signal in the shape of a square wave, so the DVM should read between 5V and 0V, If signal is not, replace encoder.

COMMON PROBLEMS:

Display shows information other than Rate and Totals in the RUN mode:

Press Up or Down arrow to scroll thru display until Rate and Totals are displayed. This is commonly seen after resetting the Sub-Totals Counter.

After performing the initial Zero or Span Calibration during Scale Start-up, the error percentage is something other than 0.00%:

This indicates that the system has already been calibrated. During the initial Zero and Span calibration**, the system can only answer 0.00% error**. To confirm that the system has already been calibrated, access the VIEW/MODIFY Menu, scroll to COMPUTED PARAMS sub-menu and access NO. Zero Calib and/or NO. Span Calib. The numbers shown are the total number of times that a zero or span calibration has been performed. If it is anything other than “0”, the system has been previously calibrated. A System Reset must be performed in order to make these parameters “0” again so that an initial Zero and Span calibration may be performed.

Auto Measure routine provides improper results for Belt Length and Belt Speed:

Make sure that the Speed PPR and Speed Diameter were entered properly (see Section 6). If these 2 parameters were entered wrong, improper results will occur. Perform System Rest and begin again if necessary.

System displays intermittent faulty readings of rate, belt speed, etc.:

This is most often caused by electrical interference in the low-level voltage signals provided by the load cells and speed sensors. ***ALL FIELD WIRING FROM THE LOAD CELLS AND SPEED SENSOR MUST BE IN SEPARATE CONDUIT, AS FAR AWAY AS POSSIBLE FROM ALL HIGH LEVEL POWER VOLTAGES. Do NOT ignore this fact!***

Fuse Specifications: 2.5A, 250V Littlefuse Type 21602.5 or equal.

7.2 INTERNAL TEST POINTS/ LED FUNCTIONS

The T06 Totalizer has a number of test points located on the circuit board. The list of test points is as follows**:**

NUMBER	DESCRIPTION	EXPECTED SIGNAL LEVEL
With the **COM** Lead from your meter connected to **TP2**, measure the following:		
TP11	Constant speed jumper	5V with no jumper across Const and Com, 0 V with jumper
TP12	Print	5V with no jumper across Print Enable and SGND, 0 V with jumper
TP13	Interlock	5V with no jumper across Interlock and SGND, 0 V with jumper
TP14	Total Relay Driver	5V when remote total increments, otherwise 0 V
TP15	Rate Output Driver	0 to 5 V depending upon the rate output
TP1	+5 VDC	+5 VDC
TP25	Speed Signal	Speed input frequency as displayed by DS7
TP31	Config (input to microcontroller)	+ 5V
With the **COM** Lead from your meter connected to **TP4**, measure the following:		
TP3	+12 VDC	+12 VDC
TP5	-12 VDC	-12 VDC
TP23	V/F input (0.0 to 5.00 VDC)	0 to 5 V signal depending upon load cell mV (0V = 0 mV , 5V = 50 mV)
With the **COM** Lead from your meter connected to **TB1 -EXC**, measure the following:		
TB1 +EXC	+Excitation	+ 9.8 V

LED	FUNCTION	DESCRIPTION
DS1	-12V (LCD Display)	Illuminates during normal operation, indicating -12V present
DS2	-5V	Illuminates during normal operation, indicating -5V present
DS3	+12V	Illuminates during normal operation, indicating +12V present
DS4	+5V (Digital)	Illuminates during normal operation, indicating +5V Digital present
DS5	+5V (Analog)	Illuminates during normal operation, indicating +5V Analog present
DS6	+24V (Current output)	Illuminates during normal operation, indicating +24V present for current output
DS7	Speed Sensor	Illuminates when Speed Sensor is connected, indicating pulse input present
DS8	Remote Total counts	Illuminates with each pulse (count)

IF MICROCONTROLLER LOCKS-UP, CYCLE POWER.

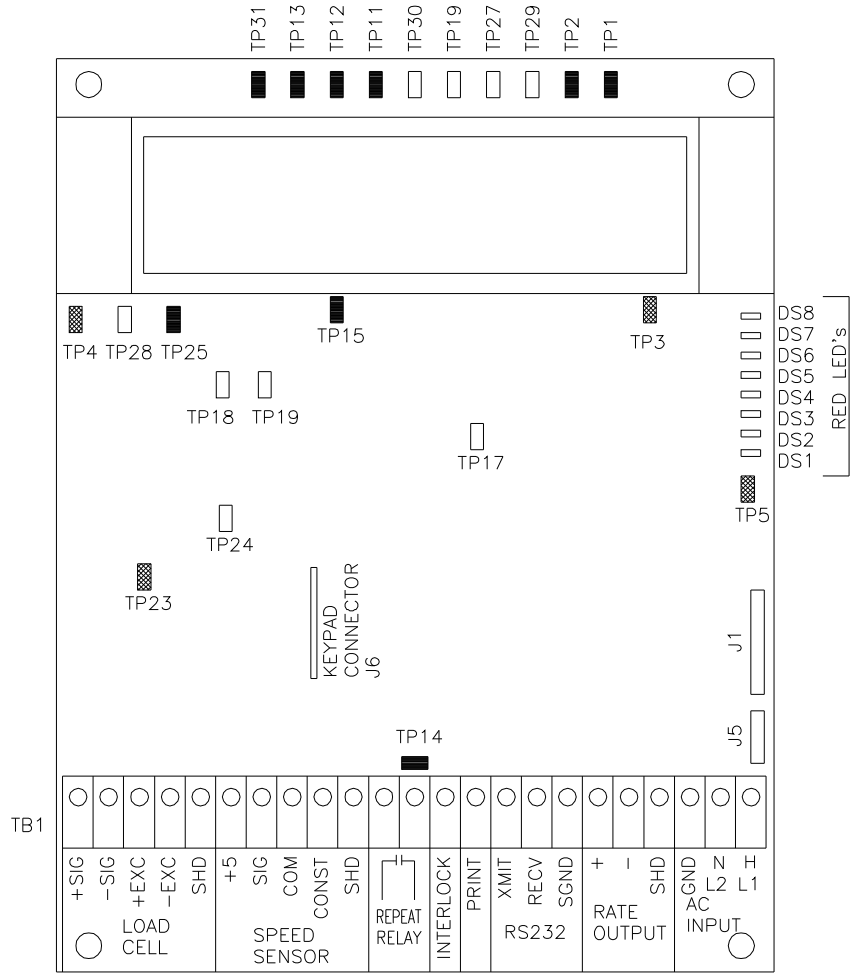

REV	ECO	DESCRIPTION	BY	DATE

SCALE: NONE
DRAWN BY: FOX
DATE: 01JAN04
ENGINEER
DATE
APPROVED BY
DATE

ASGCO Complete Conveyor Solutions

TITLE: TEST POINT LOCATION MODEL T06 TOTALIZER

DRAWING NUMBER: 06-DTP-001
REV: Ø

ASGCO WEIGH SCALE DATA SHEET

301 Gordon Street
Allentown, PA 18102
1.800.344.4000
Date:_____

Customer _____ Distributor _____
Location _____ Conveyor _____

Collected Data:

	Value	Units
Capacity		
Belt Speed		
Belt Width		in
Scale Capacity		
Calibration Duration		rev
Calibration Weight		lbs
Weigh Span		ft
Belt Length		ft
Conveyor Angle		deg
Motor Horsepower		hp
Skirtboard Length		in
Troughing Angle		deg
Ideler Spacing		ft
Diameter Can		in
Takeup Travel		ft
Counterweight		lbs
Install Distance From Load Zone		ft

Material Type	
Takeup Type	
Drive Type	
Drive Location	
Lagging	
Materials Test Done	
Speed Sensor Installed	
Speed Sensor Location	
Location of Totalizer	
Conveyor Condition	
# of Idlers Before & After	

Build-up on:	
Cans	
Belt	
Return Idler	

CONVEYOR DIAGRAM

Installer_____ Date_____

ASGCO Mfg., Inc., Standard Terms and Conditions of Guarantees and Warranties

1.0 ASGCO Mfg., Inc. Guarantees equipment manufactured by ASGCO to be free from defects in material and workmanship for a period of 12 months from date of installation, for up to 18 months from date of shipment. This warranty shall not apply if the equipment is modified, tampered with, misused, or subjected to abnormal working conditions (including but not limited to lightning and water damage). Equipment manufactured by others is to be the manufacture's standard warranty.

2.1 ASGCO to warranty defects in material and workmanship per the following Terms and Conditions 2.2 through 2.12:

2.2 Equipment considered defective by warranty claimant shall be returned to ASGCO operations for warranty evaluation. Claimant shall request a Return Goods Authorization Number and Claim Form before returning equipment.

2.3 Equipment shipped to claimant by ASGCO before claimed defective equipment is returned or received by ASGCO shall require a purchase order from claimant for equipment before equipment will be shipped. Claimed defective equipment shall be returned to ASGCO within 14 days after shipment of replacement equipment or ASGCO will invoice claimant for equipment against referenced purchase order.

2.4 Equipment warranty does not include on-site equipment evaluation, repair, replacement, field service or travel to and from job site. Claimant to pay ASGCO Standard Field Engineering Service Rates for on-site warranty evaluation, replacement and repair of equipment. For on-site rates, request "Contract Agreement for Field Engineering Service".

2.5 Claimant to ship equipment prepaid and insured to ASGCO (collect shipments will not be accepted). ASGCO to pay return freight to claimant, normal delivery, for equipment repaired or replaced under warranty.

2.6 ASGCO shall inspect claimants returned defective equipment to determine the extent of the repair and/or replacement cost covered under warranty. ASGCO shall advise claimant of warranty evaluation and of any costs to claimant for labor and/or parts not covered under warranty.

2.7 ASGCO shall have the option to repair or replace defective equipment covered under warranty.

2.8 Warranty shall cover parts and labor to repair or replace without charge, defective equipment ONLY.

2.9 Claimant is responsible for the cost of removal, crating and shipping of defective equipment to be returned to ASGCO.

2.10 Claimant is responsible for the cost of re-installing equipment repaired or replaced under warranty.

2.11 ASGCO shall in no event be liable for any damages, lost production and/or down time of any kind associated with equipment warranty including, without limitation, loss of revenue or profits, and failure to realize benefits.

2.12 This warranty is in lieu of all other warranties, express or implied but not limited to changes approved by an officer of ASGCO.

ASGCO Mfg., Inc. Standard Terms and Conditions of Guarantees and Warranties Form WG-1001