ASGCO
Complete Conveyor Solutions

SUPER-SKALPER®
with E-Z Torque®

INSTALLATION, OPERATION & MAINTENANCE INSTRUCTIONS

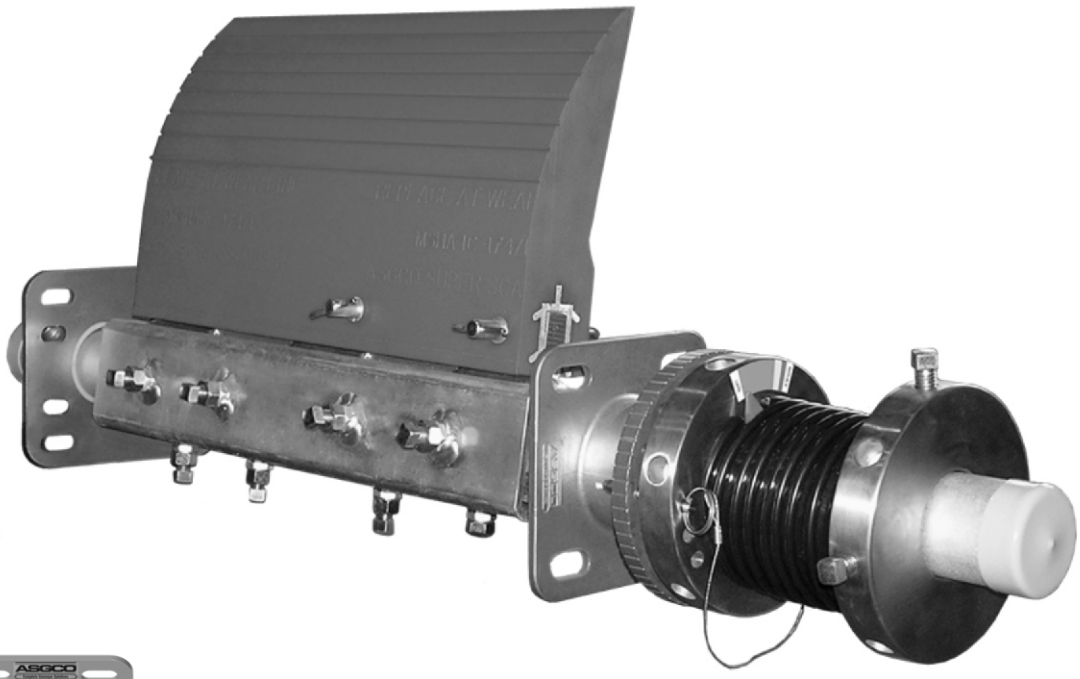

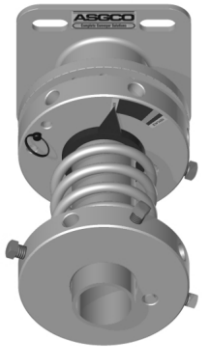

E-Z Torque®

U.S. Patent No. 5,992,614
Other Patents Pending

Check us out at
www.asgco.com

Customer Service
800-344-4000

24 Hour Emergency
Service and Parts
610-821-0210

ASGCO Mfg., Inc.
301 Gordon Street
Allentown, PA 18102
610-821-0216
FAX 610-778-8991

© 7/2017 ASGCO® Manufacturing, Inc.

Important Safety Notice

Always observe the basic rules of safety when working with any conveyor system. To avoid injury and equipment damage, be sure that all controls to the conveyor are locked out and the power source is disconnected at all times during installation.

Overall View

If mounting structure is not available, additional steel may have to be added. *Note: Excess mounting tube may be trimmed after installation. Also note required lubrication of components.*

Components Diagram

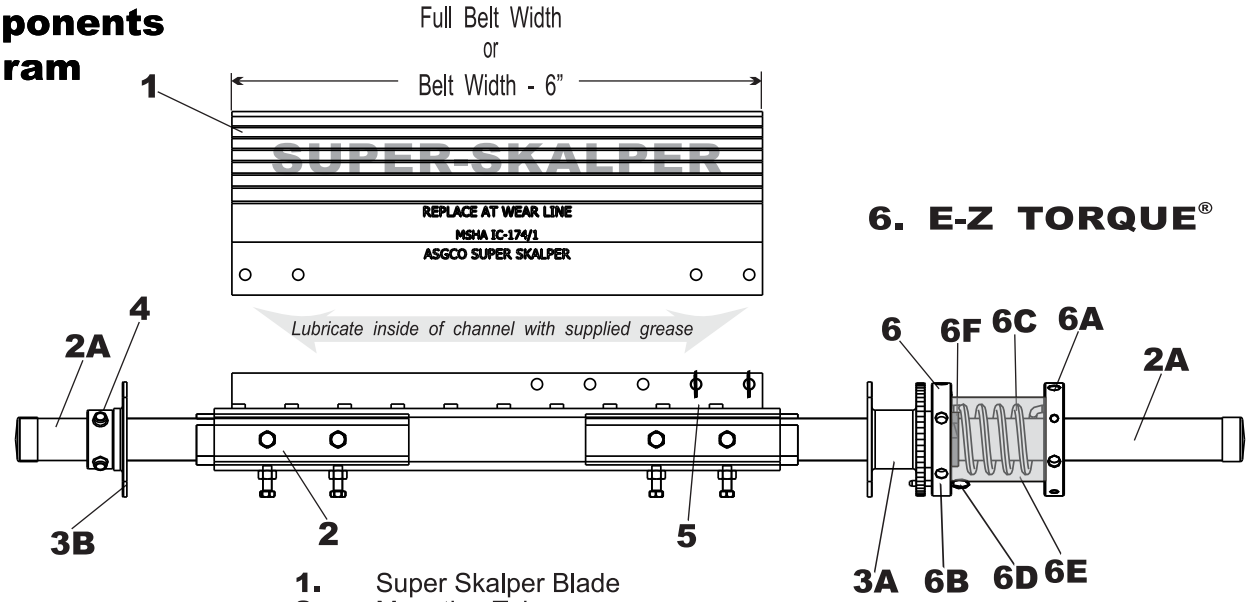

1. Super Skalper Blade
2. Mounting Tube
2A. Mounting Tube Insert
3A. Tensioner Mounting Bracket w/Collar
3B. Opposite Side Mounting Plate with Bushing
4. Locking Collar with Set Screws
5 Blade Locking Pins (2)
6. E-Z Torque
6A. Outer Tensioner Collar with set screws
6B. Inner Tensioner Collar with set screw
6C. Spring (Heavy Duty Spring for 48" belt and wider)
6D. Tensioner Locking Pin
6E. Spring Cover
6F. Blade Wear Indicator

1. Determine the Critical “N” Dimension

Determining the "N" dimension, the distance from the belt surface to the mounting tube center, is critical to get the maximum cleaning performance from your system. Make sure mounting tube and tensioner system are clear of obstacles.

“N” Dimension Table	
Pulley Diameter inches [mm]	“N” Dimension inches [mm]
Note the tolerance is ± ¼” [6mm]	
18” [450mm]	7-5/8” [194mm]
20” [500mm]	7-1/4” [184mm]
24” [600mm]	6-3/4” [171mm]
30” [750mm]	6-1/8” [156mm]
36” [900mm]	5-5/8” [143mm]
42” [1050mm]	5-1/4” [133mm]
48”+ [1200mm]	4-7/8” [124mm]

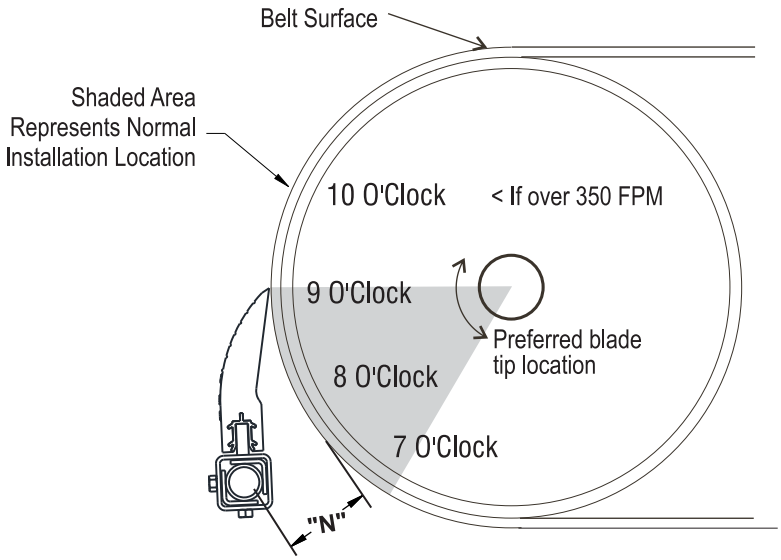

Figure 1: Typical Mounting Position

2. Cut Chute Openings

Determining the desired location of the mounting brackets. The required slot sizes/locations are shown for the tensioner side chute cut outs.

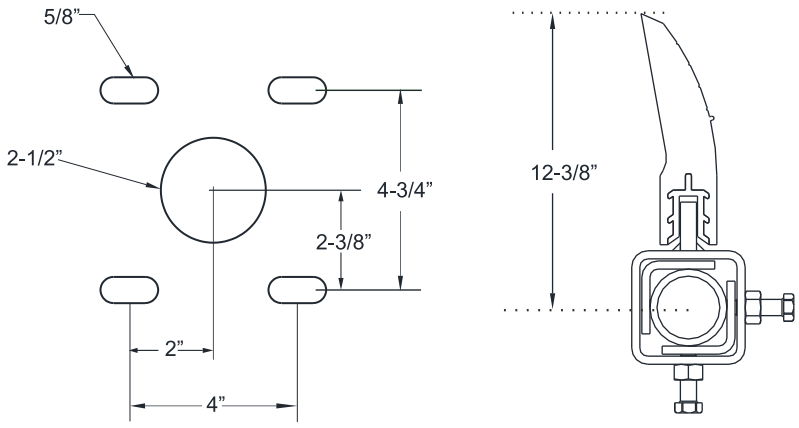

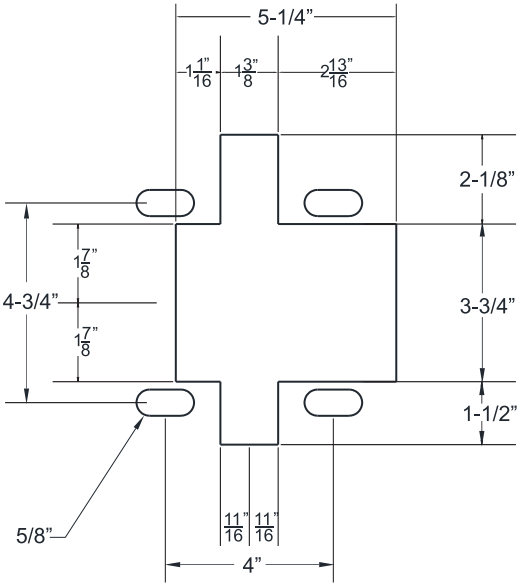

Tensioner Side Cut Out

3. Assemble Mounting Tube

Insert mounting tube extensions into end of mounting tube and fasten tube (using square head bolts and jam nuts) onto extensions at the correct distances.(12” insert for 18”-30” belt widths, 20” insert for belt widths 36”-42”, and 24” inserts for belt widths 48”-96”.
See Figure 2.

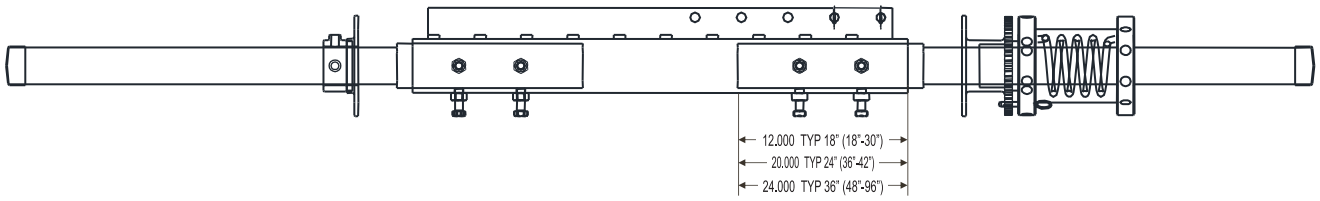

Figure 2.

4. Put Mounting Tube through Cut Outs

Place the mounting tube through the chute cut outs so that the long tube section is on the tensioner side. Place the blade onto the blade holder. Visually check the blade position and contact with the belt/pulley. Next place the supplied gasket over the tube.

5. Mount Brackets

Determine the desired location of the mounting brackets. Attach the mounting brackets to the conveyor frame by welding or bolting. Adjust mounting tube extensions as needed to ensure enough length is through the tensioner and opposite side mounting brackets.
NOTE: Mounting brackets are 304-SS, use appropriate welding rod.

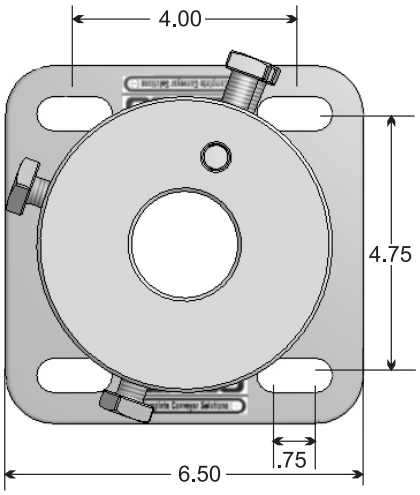

Tensioner Side

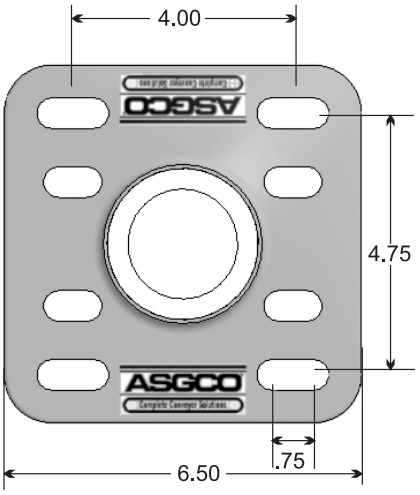

Opposite Side

6. Installing T-Handle Pins and Blade

Each system is shipped with 2 each (1/2”) T-Handle quick pins, which are to be installed in the first 2 blade holes. These pins will lock the blade to the tube.

7. Select Correct Spring

Each Super-Skalper® System is shipped with two springs of opposite handedness. To determine the proper spring to use:

Face the head pulley as the material would come to you. If the E-Z Torque® tensioner is on the *right* side, then use the Silver Spring (entire spring is silver-grey). If the tensioner is to your *left*, then use the Gold Spring (yellow tipped spring).

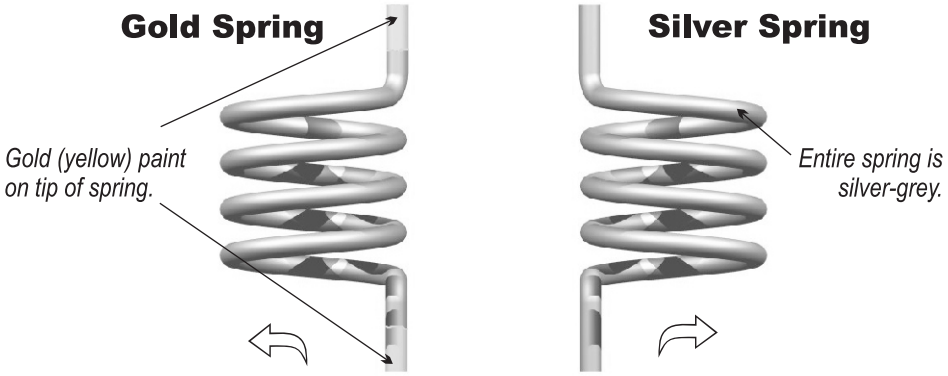

8. Assemble E-Z Torque® Tensioner:

Assemble the components of the E-Z Torque tensioner. Tighten all set screw to 70 ft./lbs.

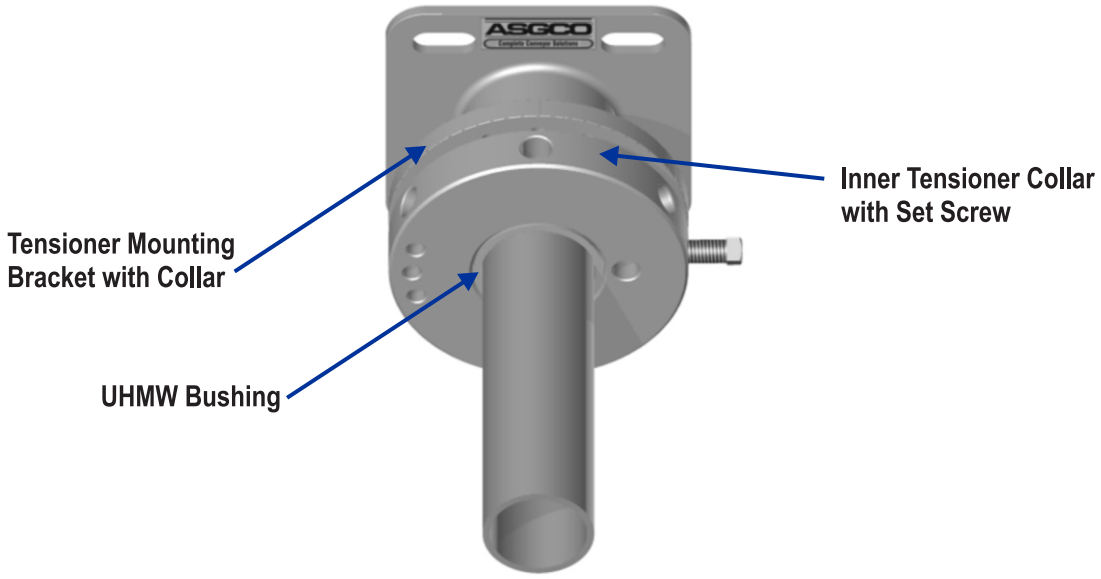

Slide UHMW bushing onto the tensioner mounting bracket. Then slide the inner tensioner collar onto the UHMW bushing.

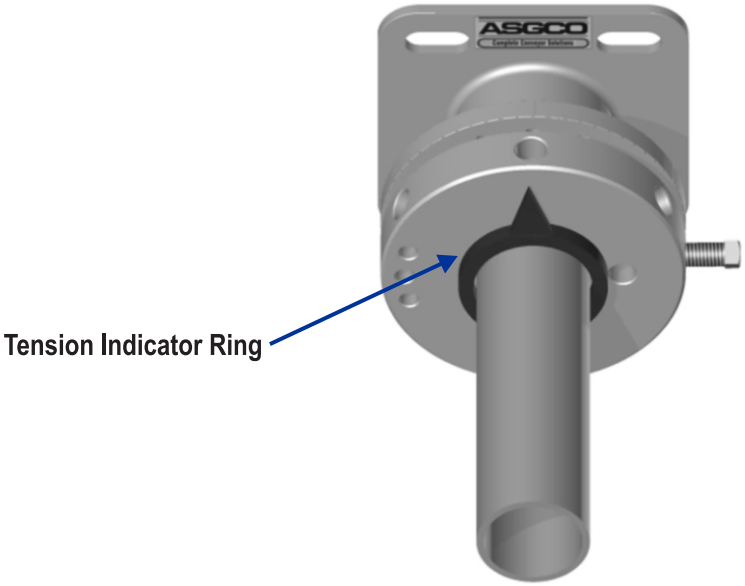

Slide ring onto the mounting tube, flush with the UHMW bushing. Do not tighten the set screws on the ring in this step.

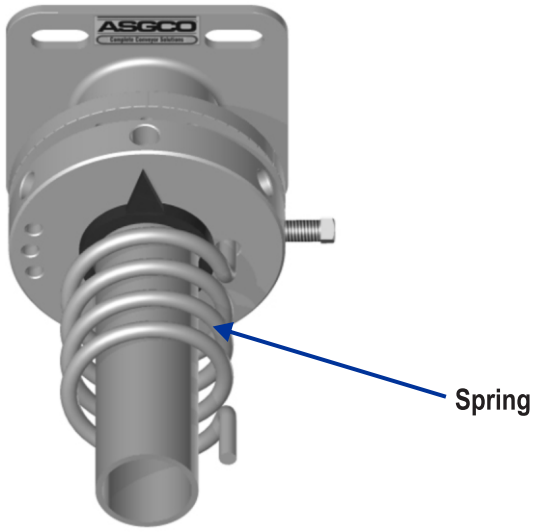

Insert one end of the spring into the Inner Tension Collar. The end of the spring should be seated all the way through the collar. Ring should be able to move freely though out installation. Do not tighten set screw until both collars are in place.

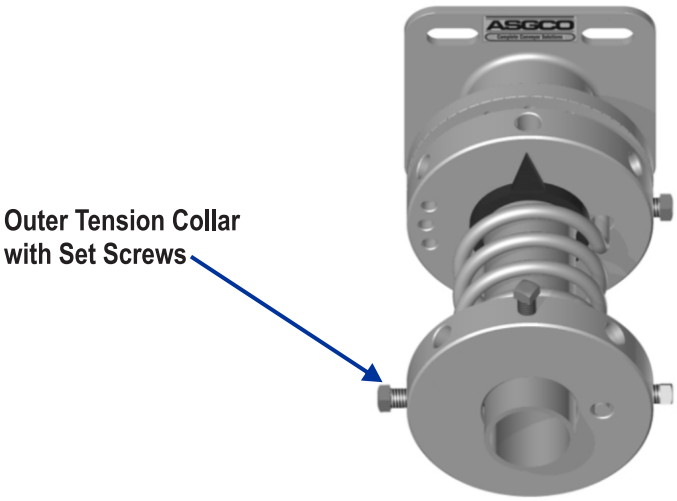

Slide the Outer Tension Collar onto the pipe and spring. With both collars in place, tighten the set screws on both ends of the spring and the set screws on the mounting tube. Assemble the components of the E-Z Torque® tensioner. Tighten all set screws to 70 ft./lbs.

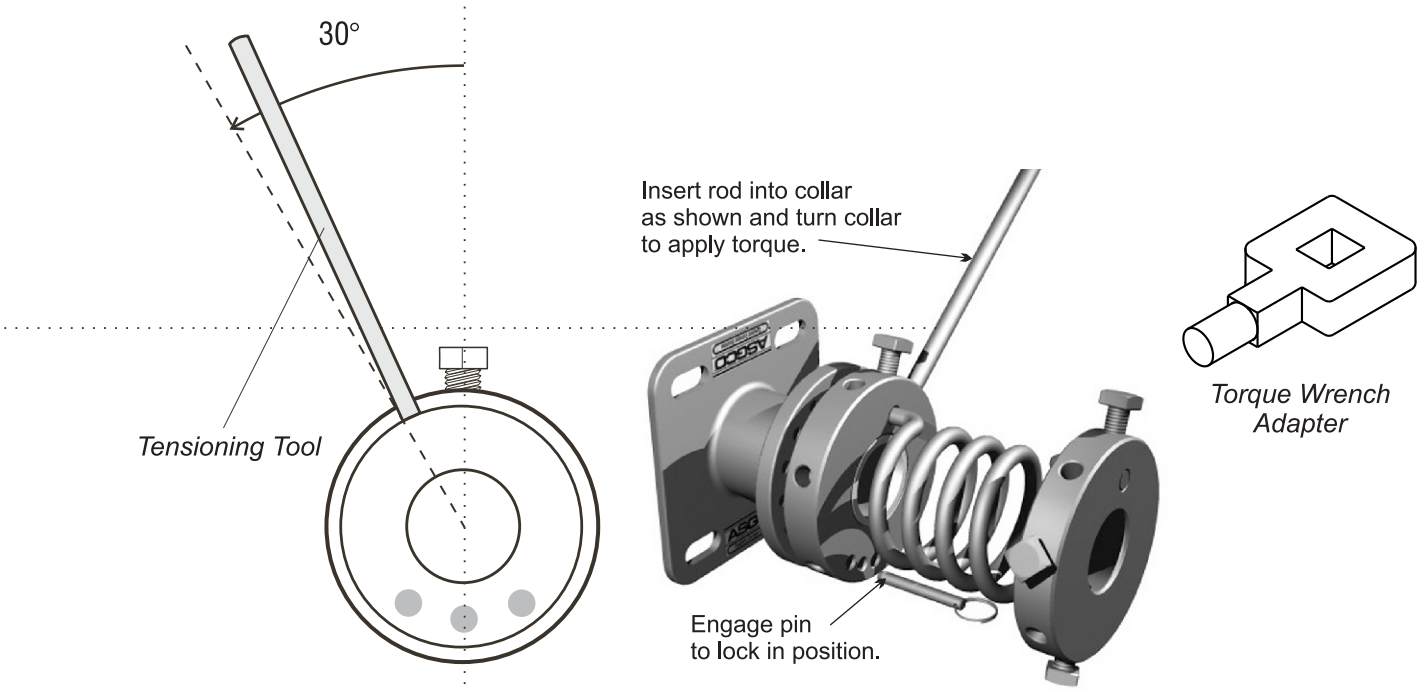

Set tension to about 1-½ ft/ lb torque per inch of blade width. (See chart below) 1 degree rotation equals approx. 2ft./lb.

Blade Width	Torque Ft-Lb	Spring Rotation Degrees
24	36	18
30	45	22
36	54	27
42	63	31

Blade width 48” and above, dual tensioners are supplied. Recommended tension **per** tensioner. *(see chart below)*

Blade Width	Torque Ft-Lb	Spring Rotation Degrees
48	36	18
54	40	20
60	45	22
72	54	37
84	63	31
96	72	36

Use direct torque/reading if using a torque wrench.

Decrease or increase as necessary. The minimum amount of blade force required to clean the belt will extend blade life. The tensioning rod may be used to get approximate blade tension. Use the torque wrench adapter to accurately tension the blade.

11. Set Wear Indicator:

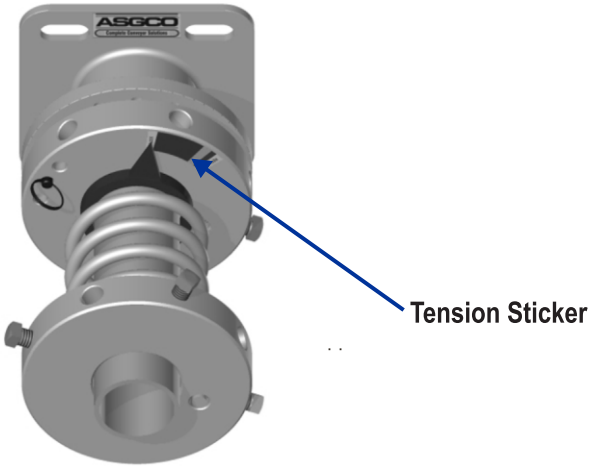

With the system tensioned, place the blade wear sticker on the Inner Tension Collar. It is recommended to align the sticker 90 degrees from the pin and spring hole on the collar, to ensure the indicator can travel the full distance required to measure blade life. Position the ring at the 100% line on the blade wear sticker and tighten the set screws on the ring.

Maintenance

1.) Frequent inspections the key to proper belt cleaning and easy scraper servicing. Weekly inspections are recommended, but actual service frequency may vary widely depending on various plant operating conditions.

2.) Inspect the belt surfaces and edges for cracks, splits, tears, holes or any other worn or damaged condition occurring on the surfaces or edges of the belt itself. If necessary make repairs to the belt. Wash the entire cleaner regularly to prevent excessive build-up. Check the tightness of all fasteners.

3.) Inspect for proper operation. Adjust tension as required.

4.) Replace the Super-Skalper® scraper blade as required. Use only ASGCO® Manufacturing approved replacement scraper blades.

Information

Key	Description	Part Number
1	Super-Skalper® Blade Replacement	ASG-SSK[X]-[BW]-A-1 [X]=Blade Type, [BW]=Blade Width
2	Super-Skalper® Mounting Tube	M-ASG-SSKMT-SQ-[BW]A-1
3A	Mounting Bracket Tension Side	ASG-EZT-TS-ASM-2 (Includes Bushing)
3B	Mounting Bracket Opposite Side	ASG-F1-MB-OS-2
	Bushing (Off-Side)	ASG-F1-UHMW-BUSHING-1
4	Locking Collar with Set Screws	ASG-F1-LC-1
5	Locking Pins (2)	M-ASG-SSKMT-CL
6	E-Z Torque®	M-ASG-EZT-2
	Bushing (Tension Side)	ASG-UHMW-BUSHING-1
6A	Outside Collar	ASG-EZT-OCHS-SS-2
6B	Inside Collar	ASG-EZT-ILC-SS-2
6C	Spring	ASG-ROT-[LS or RS]-1242-SS-1
6D	Locking Pin (Tensioner)	M-ASG-ROT-LPC
	Rotary Tensioning Tool	ASG-ROT-TT-SS
6E	Spring Cover	ASG-EZT-SPRING-COVER-1
6F	Blade Wear Indicator Ring	ASG-EZT-IND-RING

Call your ASGCO Distributor for any questions or replacement parts

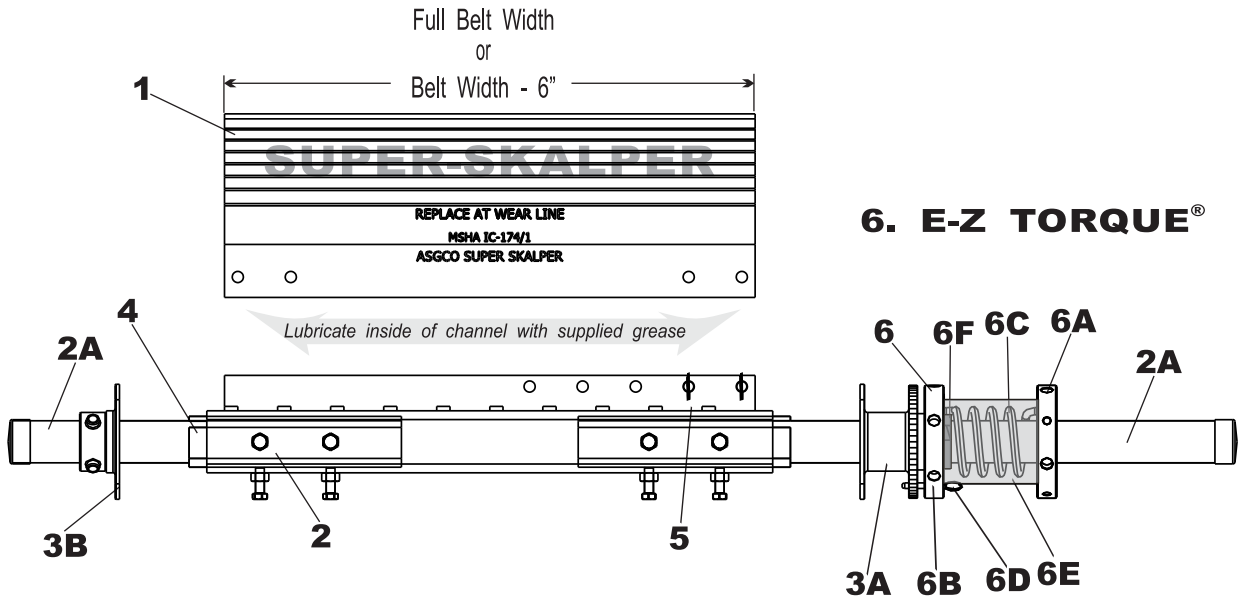

TROUBLE SHOOTING

PROBLEM	SOLUTION
Excess vibration of the scraper.	Make certain all bolts are tight and the pin is securely engaged on the tensioner. Ensure the cleaners n-dimension is proper (See Table and Figure 1).
Excess carryback.	Check for excess build-up on the scraper. Check for proper Scraper tension. Put additional tension on cleaner. Check for non-uniform scraper wear. Check n-dimension. Clean the back-side of the belt cleaner.
Check for wear on the cleaning tips.	Check thickness of carry-back. If the cleaner must remove more than about 1/8” of material then an additional cleaner may be needed.
Frozen material on scraper.	Place heaters near scraper to melt frozen material. (Use caution not to burn belt or cleaner)
Blade wearing in center	BVW-6” BW-12 (Put a new blade on the concentrates cleaning in the center of the flow of the material.
Blade wearing more on one side	Check n-dimension.